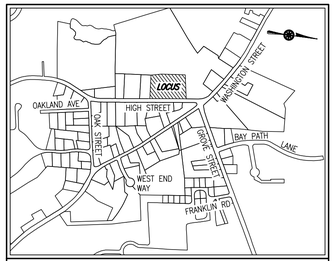

LOCATION MAP SCALE: 1" = 1000'±

15 HIGH STREET
PROPOSED RESIDENTIAL DEVELOPMENT

15, 19, 27 & 35 HIGH STREET
NORWELL, MASSACHUSETTS

APRIL 30, 2021

INDEX

SHEET	DESCRIPTION
C1.1	COVER AND INDEX
C2.1	EXISTING CONDITIONS PLAN
C3.1	SITE LAYOUT PLAN
C4.1	GRADING AND DRAINAGE PLAN
C5.1	UTILITY PLAN
C6.1–6.4	CONSTRUCTION DETAILS
L1.0	STREET TREE & LANDSCAPE PLAN

2021 MassGIS GOOGLE MAP

VICINITY MAP

OWNER/APPLICANT:
NORTHLAND RESIDENTIAL CORPORATION
80 BEHARRELL STREET, SUITE E
CONCORD, MASSACHUSETTS 01742
P: 781–229–4700

ATTORNEY:
FREEMAN LAW GROUP, LLC
86 WILLOW STREET
YARMOUTHPORT, MA 02675
P: 508–362–4700

CIVIL ENGINEER/SURVEYOR:
MERRILL ENGINEERS AND LAND SURVEYORS
427 COLUMBIA ROAD
HANOVER, MA 02339
P: 781–826–9200

LANDSCAPE ARCHITECT:
RYAN ASSOCIATES LANDSCAPE ARCHITECTURE AND PLANNING
144 MOODY STREET, BUILDING 4
WALTHAM, MASSACHUSETTS 02453
P: 781–314–0401

ARCHITECT:
UNION STUDIO ARCHITECTURE & COMMUNITY DESIGN
140 UNION STREET
PROVIDENCE, RI 02903
P: 401–272–4724

COPYRIGHT © BY MERRILL CORPORATION
NO PART OF THIS DOCUMENT MAY BE REPRODUCED, STORED IN A RETRIEVAL SYSTEM, OR TRANSMITTED IN ANY FORM OR BY ANY MEANS, ELECTRONIC, MECHANICAL, PHOTOCOPYING, RECORDING OR OTHERWISE, WITHOUT THE EXPRESS WRITTEN CONSENT OF MERRILL CORPORATION WITH THE EXCEPTION OF ANY REGULATORY AUTHORITY WHICH MAY REPRODUCE IT IN CONJUNCTION WITH THE PERFORMANCE OF OFFICIAL BUSINESS UNDER ITS JURISDICTION. ANY MODIFICATIONS MADE TO THIS DOCUMENT WITHOUT THE EXPRESS WRITTEN CONSENT OF MERRILL CORPORATION SHALL RENDER IT UNUSABLE.

REVISIONS

1	4/30/21	REVIEW & COORDINATION

COMMONWEALTH OF MASSACHUSETTS
DEBORAH W. KELLER
CIVIL
No. 45874
REGISTERED PROFESSIONAL ENGINEER

DRAWN BY: JG

DESIGNED BY: DK

CHECKED BY: DK

Merrill Engineers and Land Surveyors
427 COLUMBIA ROAD, HANOVER, MA 02339 / T: (781) 826-9200
26 UNION STREET, PLYMOUTH MA 02360 / T: (508) 746-6060
WWW.MERRILLINC.COM

SITE PLAN
#15, 19, 27 & 35 HIGH STREET
NORWELL, MASSACHUSETTS 02061

OWNER/APPLICANT
NORTHLAND RESIDENTIAL CORPORATION
80 BEHARRELL STREET, SUITE E
CONCORD, MASSACHUSETTS 01742

JANUARY 29, 2021

SCALE: AS NOTED

JOB NO. 20–127

LATEST REVISION:
APRIL 30, 2021

COVER & INDEX

SHEET C1.1

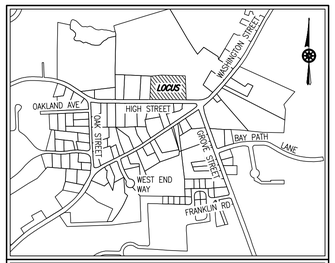

LOCATION MAP SCALE: 1" = 1000'±

RECORD OWNER:

ASSESSORS MAP 11B BLOCK 17 LOT 67
#15 HIGH STREET

44 HIGH STREET REALTY TRUST
169 MACOMBERS RIDGE
MARSHFIELD, MA 02051
DEED BOOK 40257 PAGE 154

ASSESSORS MAP 11B BLOCK 17 LOT 16
#19 HIGH STREET

STEPHEN N. & LAURIE K. MARSH
169 MACOMBERS RIDGE
MARSHFIELD, MA 02051
DEED BOOK 21541 PAGE 184
LOT A – PLAN #83 OF 2002

ASSESSORS MAP 11B BLOCK 17 LOT 17
#27 HIGH STREET

27 HIGH STREET REALTY TRUST
169 MACOMBERS RIDGE
MARSHFIELD, MA 02051
DEED BOOK 47490 PAGE 169
LOT B – PLAN #83 OF 2002

ASSESSORS MAP 11B BLOCK 17 LOT 18
#35 HIGH STREET

35 HIGH STREET REALTY TRUST
169 MACOMBERS RIDGE
MARSHFIELD, MA 02051
DEED BOOK 49753 PAGE 57
LOT B – PLAN BOOK 2881 PAGE 295

NOTES:

1. TOPOGRAPHIC AND DETAIL INFORMATION SHOWN HEREON IS BASED UPON AN ON THE GROUND SURVEY PERFORMED BY MERRILL ENGINEERS AND LAND SURVEYORS DURING SEPTEMBER OF 2020.
2. ALL ELEVATIONS ARE BASED ON THE NORTH AMERICAN VERTICAL DATUM OF 1988.
3. SUBJECT SITE IS IN THE "RESIDENCE B," "BUSINESS B4," AND "BUSINESS C1" ZONES AS DEPICTED ON THE TOWN OF NORWELL ZONING MAP.
4. SUBJECT SITE IS PARTIALLY IN THE TOWN OF NORWELL AQUIFER PROTECTION DISTRICT.
5. SUBJECT SITE IS PARTIALLY IN A ZONE B AND ZONE C SURFACE WATER PROTECTION AREA.
6. EXISTING UTILITIES, WHERE SHOWN, HAVE BEEN COMPILED BASED ON OBSERVED ABOVE GROUND EVIDENCE AND AVAILABLE RECORD PLANS AND ARE TO BE CONSIDERED APPROXIMATE. MERRILL ENGINEERS AND LAND SURVEYORS DOES NOT GUARANTEE THE LOCATION OF THE UNDERGROUND UTILITIES SHOWN OR THAT ALL EXISTING UTILITIES AND/OR SUBSURFACE STRUCTURES ARE SHOWN.

FLOOD NOTE:

BY GRAPHIC PLOTTING ONLY, THIS PROPERTY IS LOCATED IN ZONE X OF THE FLOOD INSURANCE RATE MAP, AS SHOWN ON COMMUNITY MAP No. 25023C0092J, WHICH BEARS AN EFFECTIVE DATE OF JULY 17, 2012, AND IS NOT IN A SPECIAL FLOOD HAZARD AREA.

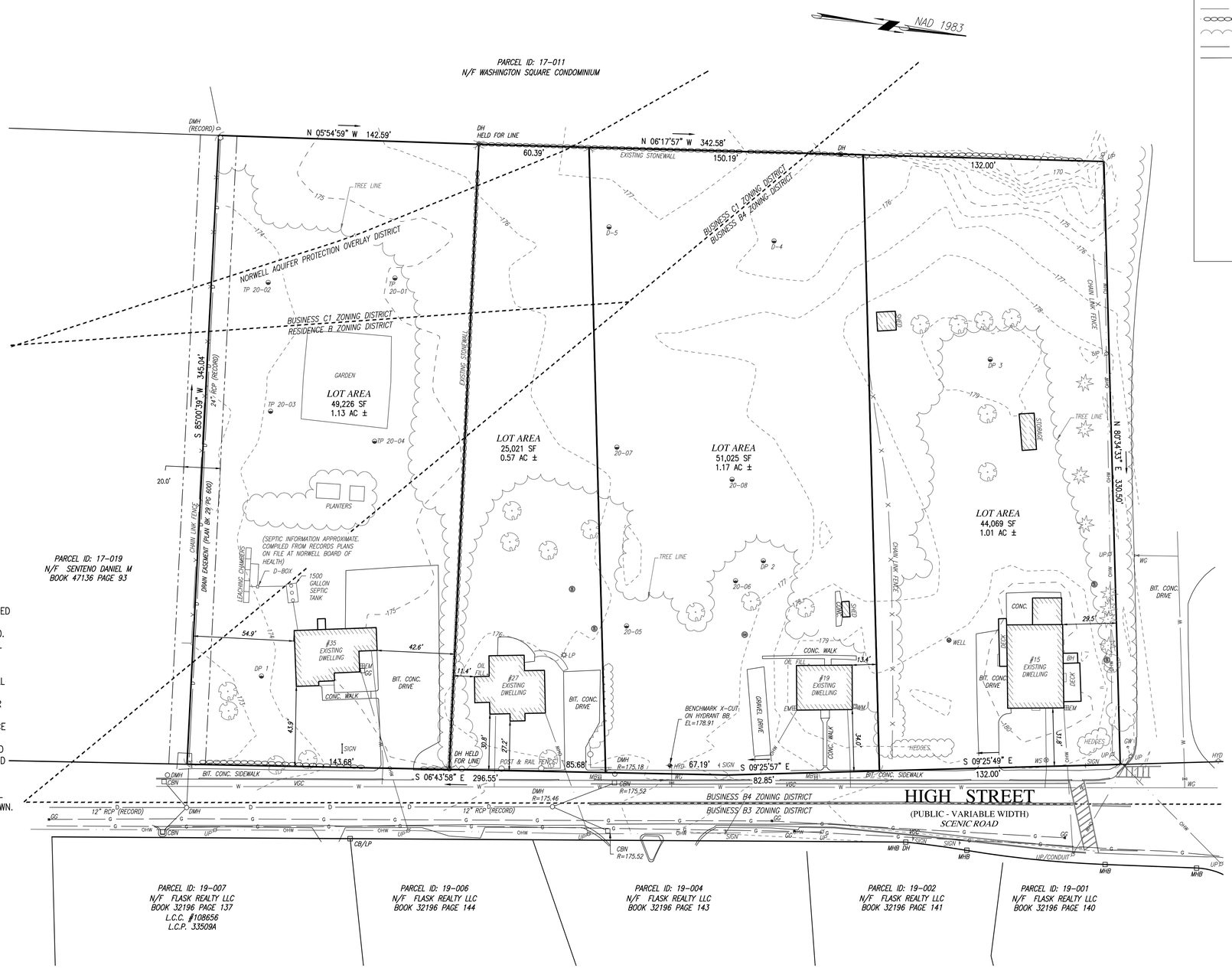

LEGEND

CB/LP	CONCRETE BOUND W/ LEAD PLUG
DH	DRILL HOLE FOUND
MHB	MASS. HIGHWAY BOUND FOUND
	CONIFEROUS TREE
	DECIDUOUS TREE
100	CONTOUR LINE
G	GAS LINE
OHW	OVERHEAD WIRES
	FIELD STONEWALL
	TREE LINE
W	WATERMAIN
	PAINT LINE
DMH	DRAIN MANHOLE
EM	ELECTRIC METER
GG	GAS GATE
GM	GAS METER
GW	GUY WIRE
HYD	FIRE HYDRANT
LP	LIGHT POLE (PUBLIC)
MB	MAIL BOX
OF	OIL FILL
SIGN	SIGN
	DOUBLE POST SIGN
TBM	BENCHMARK
TPIT	TEST PIT
WG	WATER GATE
WM	WATER METER
WS	WATER SERVICE

COPYRIGHT © BY MERRILL CORPORATION
NO PART OF THIS DOCUMENT MAY BE REPRODUCED, STORED IN A RETRIEVAL SYSTEM, OR TRANSMITTED IN ANY FORM OR BY ANY MEANS, ELECTRONIC, MECHANICAL, PHOTOCOPYING, RECORDING OR OTHERWISE, WITHOUT THE EXPRESS WRITTEN CONSENT OF MERRILL CORPORATION WITH THE EXCEPTION OF ANY REGULATORY AUTHORITY WHICH MAY REPRODUCE IT IN CONJUNCTION WITH THE PERFORMANCE OF OFFICIAL BUSINESS UNDER ITS JURISDICTION. ANY MODIFICATIONS MADE TO THIS DOCUMENT WITHOUT THE EXPRESS WRITTEN CONSENT OF MERRILL CORPORATION SHALL RENDER IT UNUSABLE.

30 0 30 60 90
SCALE IN FEET

REVISIONS

1	4/30/21	REVIEW & COORDINATION

COMMONWEALTH OF MASSACHUSETTS
DOUGLAS J. AABERG
NO. 35382
PROFESSIONAL LAND SURVEYOR

DRAWN BY: JG

DESIGNED BY: DK

CHECKED BY: DK

Merrill
Engineers and Land Surveyors
427 COLUMBIA ROAD, HANOVER, MA 02339 / T: (781) 826-9200
26 UNION STREET, PLYMOUTH MA 02360 / T: (508) 746-6060
WWW.MERRILLINC.COM

SITE PLAN

#15, 19, 27 & 35 HIGH STREET
NORWELL, MASSACHUSETTS 02061

OWNER/APPLICANT
NORTHLAND RESIDENTIAL CORPORATION
80 BEHARRELL STREET, SUITE E
CONCORD, MASSACHUSETTS 01742

JANUARY 29, 2021

SCALE: 1"=30'

JOB NO. 20-127

LATEST REVISION:
APRIL 30, 2021

EXISTING CONDITIONS PLAN

SHEET C2.1

ZONING DATA

1. TOTAL PARCEL SIZE: 3.88± ACRES (169,341± S.F.) (ALL UPLAND)

2. ZONE: RESIDENCE B, BUSINESS B4 AND C1; AQUIFER PROTECTION OVERLAY

3. USE:
   EXISTING: RESIDENTIAL
   PROPOSED: (NO CHANGE)

4. BUILDING COVERAGE:
   MAX. ALLOWED:
   BUSINESS DISTRICTS B & C 30,481± S.F. (18%)
   EXISTING: 4,792± S.F. (2.8%)
   PROPOSED: 39,139± S.F. (23.1%)

5. SITE COVERAGE:
   AQUIFER PROTECTION DISTRICT:
   MAXIMUM ALLOWED: 84,670± S.F. (50% OF UPLAND)
   EXISTING: 12,741± S.F. (7.5% OF UPLAND)
   PROPOSED: 91,668± S.F. (54.1% OF UPLAND)

   BUSINESS DISTRICTS B & C:
   MIN OPEN SPACE ALLOWED: 56,447± S.F. (33% OF UPLAND)
   EXISTING: 156,601± S.F. (92.5% OF UPLAND)
   PROPOSED: 77,673± S.F. (45.9% OF UPLAND)

6. DIMENSIONAL REQUIREMENTS:

DISTRICT: RESIDENCE B/BUSINESS B4 & C1		EXISTING:	PROPOSED:
MIN. LOT AREA	43,560 S.F.	169,341± S.F.	160,841± S.F. (EXCLUDES STORMWATER FACILITY)
MIN. LOT FRONTAGE	80'	511.4'	511.4'
MIN. LOT WIDTH	150'(*)	485.4'	485.4'
MIN. FRONT YARD			
RESIDENCE B	35'		
BUSINESS B-4 & C-1	50'	27.2'	15.0'
MIN. SIDE & REAR YARD			
RESIDENCE B SIDE & REAR	20'	54.9'	20.0'
BUSINESS B-4 & C-1			
SIDE	10'	11.4'	20.0'
REAR	20'	85.2'	20.0'
MAX. BUILDING HEIGHT			
RESIDENCE B	34'/2½ STORIES		
BUSINESS B-4 & C-1	34'/2½ STORIES(**)	2½ STORIES	43'/3 STORIES

(*) MIN LOT WIDTH IN BUSINESS DISTRICTS A AND B SHALL BE 125 FT.
(**) MIN HEIGHT FOR DWELLING UNITS WITHIN A BUSINESS DISTRICT

7. PARKING:
   EXISTING BUILDING:
   RESIDENTIAL – NO MARKED SPACES

   REQUIRED (SECTION 201-12.6):
   DWELLING UNIT HAVING 2 OR MORE BEDROOMS – 2 SPACES
   DWELLING UNIT HAVING FEWER THAN 2 BEDROOMS – 1 SPACE

   ONE BEDROOM UNITS – 28 = 28 SPACES
   TWO OR MORE BEDROOM UNITS – 28 = 56 SPACES
   TOTAL = 84 SPACES

   PROPOSED:
   UNIT GARAGE SPACES 52
   UNIT DRIVEWAY SPACES 52
   SURFACE SPACES 18
   TOTAL PARKING SPACES 112

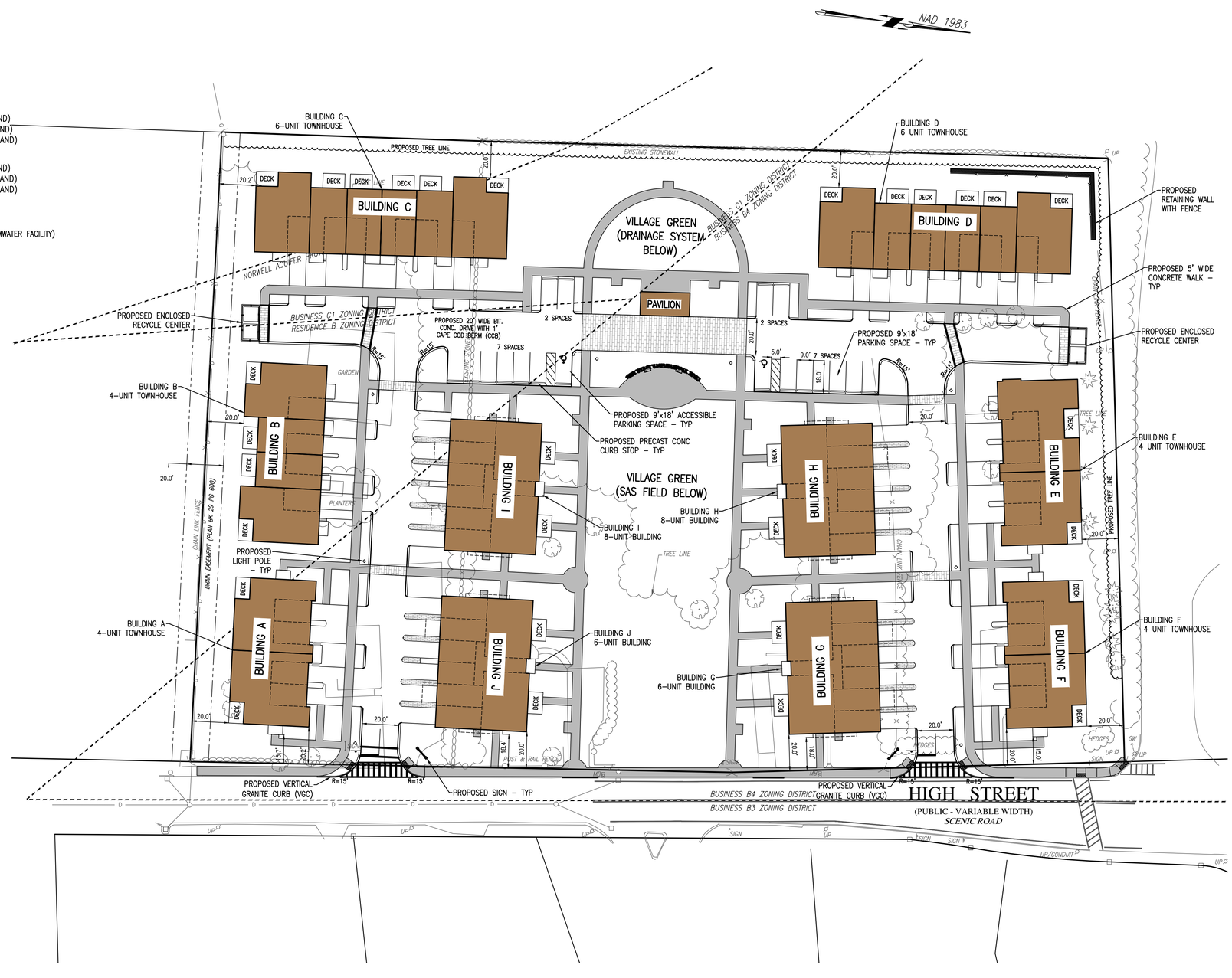

30 0 30 60 90
SCALE IN FEET

COPYRIGHT © BY MERRILL CORPORATION
NO PART OF THIS DOCUMENT MAY BE REPRODUCED, STORED IN A RETRIEVAL SYSTEM, OR TRANSMITTED IN ANY FORM OR BY ANY MEANS, ELECTRONIC, MECHANICAL, PHOTOCOPYING, RECORDING OR OTHERWISE, WITHOUT THE EXPRESS WRITTEN CONSENT OF MERRILL CORPORATION WITH THE EXCEPTION OF ANY REGULATORY AUTHORITY WHICH MAY REPRODUCE IT IN CONJUNCTION WITH THE PERFORMANCE OF OFFICIAL BUSINESS UNDER ITS JURISDICTION. ANY MODIFICATIONS MADE TO THIS DOCUMENT WITHOUT THE EXPRESS WRITTEN CONSENT OF MERRILL CORPORATION SHALL RENDER IT UNUSABLE.

REVISIONS

1	4/30/21	REVIEW & COORDINATION

COMMONWEALTH OF MASSACHUSETTS
DEBORAH W. KELLER
CIVIL
No. 45874
REGISTERED PROFESSIONAL ENGINEER

DRAWN BY: JG

DESIGNED BY: DK

CHECKED BY: DK

Merrill
Engineers and Land Surveyors
427 COLUMBIA ROAD, HANOVER, MA 02339 / T: (781) 826-9200
26 UNION STREET, PLYMOUTH, MA 02360 / T: (508) 746-6060
WWW.MERRILLINC.COM

SITE PLAN
#15, 19, 27 & 35 HIGH STREET
NORWELL, MASSACHUSETTS 02061

OWNER/APPLICANT
NORTHLAND RESIDENTIAL CORPORATION
80 BEHARRELL STREET, SUITE E
CONCORD, MASSACHUSETTS 01742

JANUARY 29, 2021

SCALE: 1"=30'

JOB NO. 20-127

LATEST REVISION:
APRIL 30, 2021

SITE LAYOUT PLAN

SHEET C3.1

30 0 30 60 90

SCALE IN FEET

COPYRIGHT © BY MERRILL CORPORATION
NO PART OF THIS DOCUMENT MAY BE REPRODUCED, STORED IN A RETRIEVAL SYSTEM, OR TRANSMITTED IN ANY FORM OR BY ANY MEANS, ELECTRONIC, MECHANICAL, PHOTOCOPYING, RECORDING OR OTHERWISE, WITHOUT THE EXPRESS WRITTEN CONSENT OF MERRILL CORPORATION WITH THE EXCEPTION OF ANY REGULATORY AUTHORITY WHICH MAY REPRODUCE IT IN CONJUNCTION WITH THE PERFORMANCE OF OFFICIAL BUSINESS UNDER ITS JURISDICTION. ANY MODIFICATIONS MADE TO THIS DOCUMENT WITHOUT THE EXPRESS WRITTEN CONSENT OF MERRILL CORPORATION SHALL RENDER IT UNUSABLE.

REVISIONS

1	4/30/21	REVIEW & COORDINATION

COMMONWEALTH OF MASSACHUSETTS
DEBORAH W. KELLER
CIVIL
No. 45874
REGISTERED PROFESSIONAL ENGINEER

DRAWN BY: JG

DESIGNED BY: DK

CHECKED BY: DK

Merrill
Engineers and Land Surveyors
427 COLUMBIA ROAD, HANOVER, MA 02339 / T: (781) 826-9200
26 UNION STREET, PLYMOUTH MA 02360 / T: (508) 746-6060
WWW.MERRILLINC.COM

SITE PLAN

#15, 19, 27 & 35 HIGH STREET
NORWELL, MASSACHUSETTS 02061

OWNER/APPLICANT
NORTHLAND RESIDENTIAL CORPORATION
80 BEHARRELL STREET, SUITE E
CONCORD, MASSACHUSETTS 01742

JANUARY 29, 2021

SCALE: 1"=30'

JOB NO. 20-127

LATEST REVISION:
APRIL 30, 2021

GRADING AND DRAINAGE PLAN

SHEET C4.1

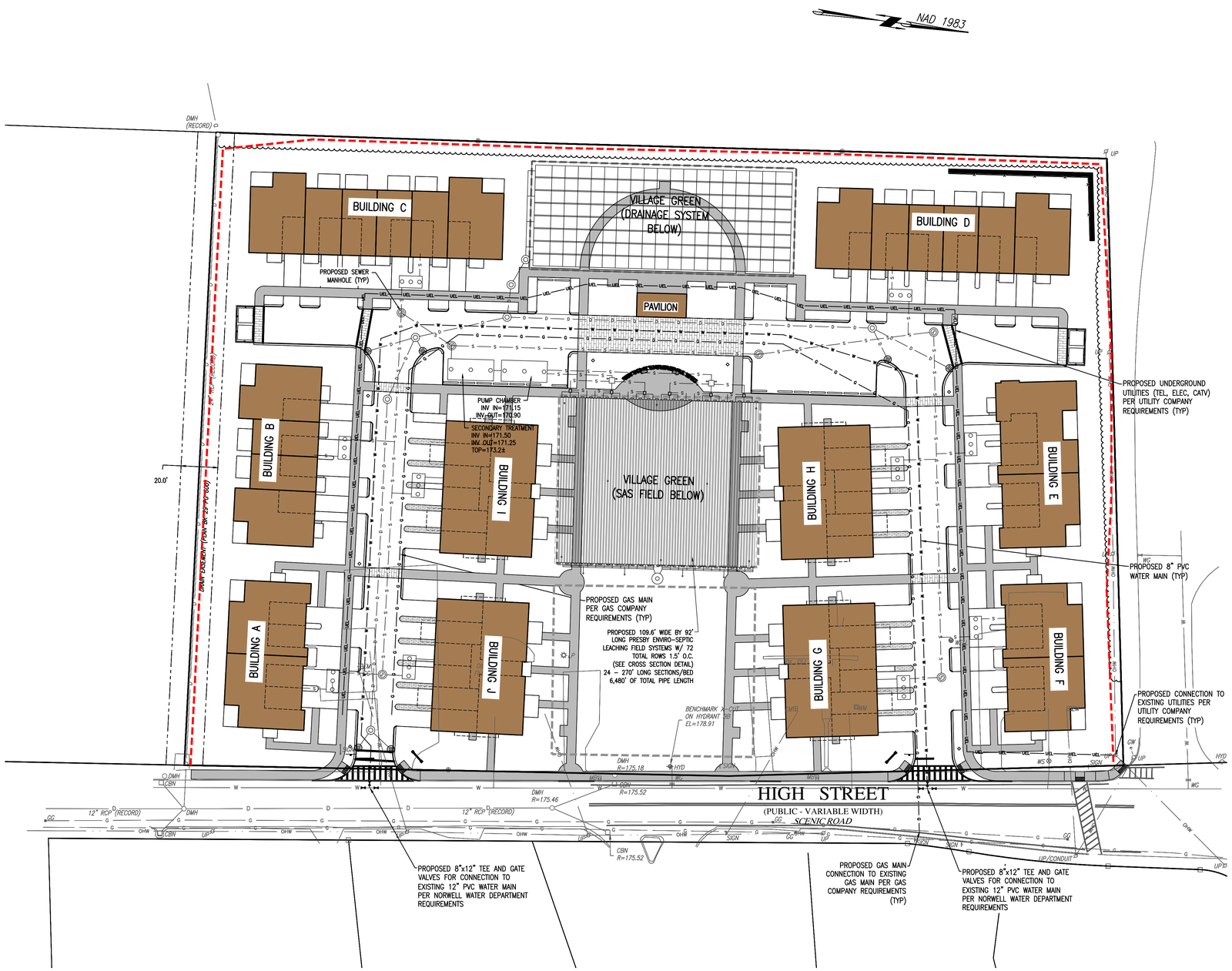

COPYRIGHT © BY MERRILL CORPORATION
NO PART OF THIS DOCUMENT MAY BE REPRODUCED, STORED IN A RETRIEVAL SYSTEM, OR TRANSMITTED IN ANY FORM OR BY ANY MEANS, ELECTRONIC, MECHANICAL, PHOTOCOPYING, RECORDING OR OTHERWISE, WITHOUT THE EXPRESS WRITTEN CONSENT OF MERRILL CORPORATION WITH THE EXCEPTION OF ANY REGULATORY AUTHORITY WHICH MAY REPRODUCE IT IN CONJUNCTION WITH THE PERFORMANCE OF OFFICIAL BUSINESS UNDER ITS JURISDICTION. ANY MODIFICATIONS MADE TO THIS DOCUMENT WITHOUT THE EXPRESS WRITTEN CONSENT OF MERRILL CORPORATION SHALL RENDER IT UNUSABLE.

REVISIONS

1	4/30/21	REVIEW & COORDINATION

COMMONWEALTH OF MASSACHUSETTS
DEBORAH W. KELLER
CIVIL
No. 45874
REGISTERED PROFESSIONAL ENGINEER

DRAWN BY: JG

DESIGNED BY: DK

CHECKED BY: DK

Merrill
Engineers and Land Surveyors
427 COLUMBIA ROAD, HANOVER, MA 02339 / T: (781) 826-9200
26 UNION STREET, PLYMOUTH, MA 02360 / T: (508) 746-6060
WWW.MERRILLINC.COM

SITE PLAN

#15, 19, 27 & 35 HIGH STREET
NORWELL, MASSACHUSETTS 02061

OWNER/APPLICANT
NORTHLAND RESIDENTIAL CORPORATION
80 BEHARRELL STREET, SUITE E
CONCORD, MASSACHUSETTS 01742

JANUARY 29, 2021

SCALE: 1"=30'

JOB NO. 20-127

LATEST REVISION:
APRIL 30, 2021

UTILITY PLAN

SHEET C5.1

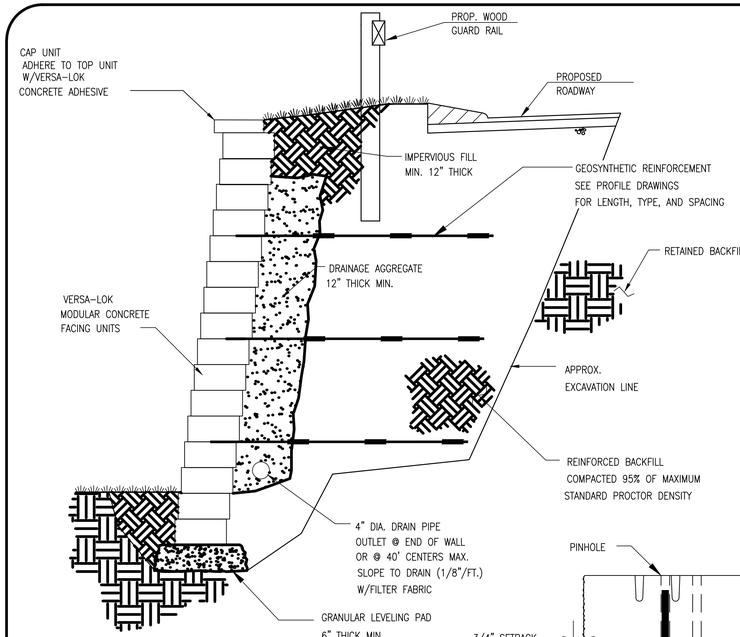

NOTE:
DETAIL PROVIDED FOR GENERAL INFORMATION ONLY. STAMPED FINAL DESIGN OF MODULAR WALL SYSTEM TO BE PROVIDED BY WALL MANUFACTURER BASED ON GEOTECHNICAL ENGINEERS RECOMMENDATIONS PRIOR TO CONSTRUCTION

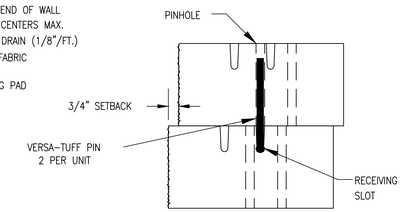

PINNING DETAIL

REINFORCED BLOCK RETAINING WALL DETAIL

(NOT TO SCALE)

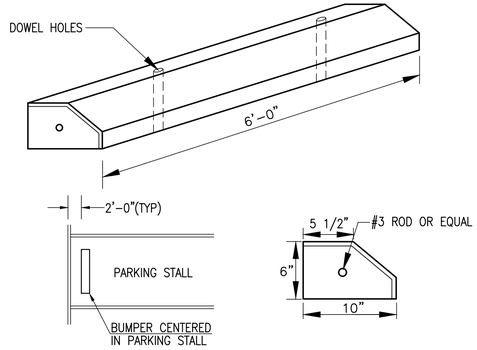

NOTE:
FOR INSTALLATION OF EACH BUMPER LOG, DRIVE (2) 5/8" DIA x 15" LONG STEEL RODS THROUGH PROVIDED OPENINGS IN BUMPER LOG AND INTO PAVEMENT UNTIL FLUSH WITH TOP OF BUMPER LOG(FOR PLACEMENT OF LOG, SEE DIAGRAM ABOVE)

PRECAST CONCRETE WHEELSTOP DETAIL

(NOT TO SCALE)

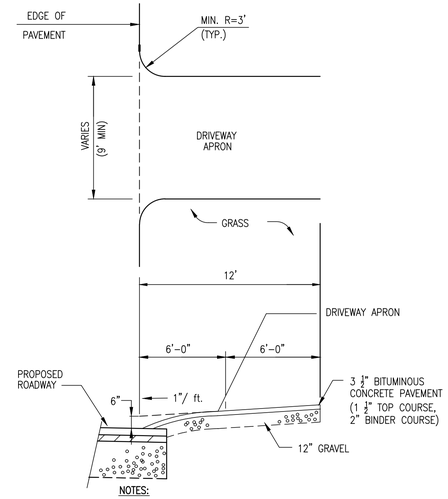

NOTES:
1. SLOPES OF ALL DRIVEWAYS SHALL NOT EXCEED 10% WITHIN 75 FEET OF STREET LINE.

DRIVEWAY APRON DETAIL

(NOT TO SCALE)

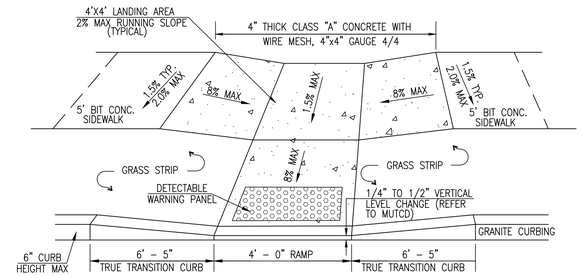

WHEELCHAIR RAMP DETAIL

(NOT TO SCALE)

NOTES:
1. DIMENSIONS SUBJECT TO CHANGE IN THE FIELD IF THE EXISTING CONDITIONS MAKE THE RAMP IMPRACTICAL, UNSAFE, OR ILLEGAL.
2. BROOM FINISH SURFACE AT RIGHT ANGLES TO DIRECTION OF TRAVEL.

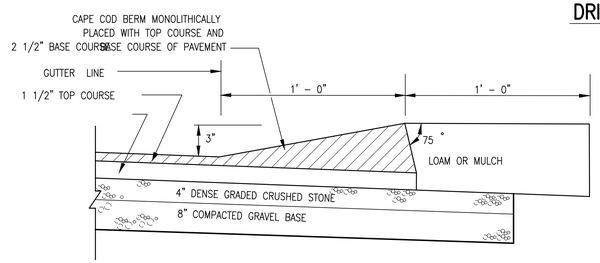

*IF THE IN-SITU MATERIAL IS TO BE USED FOR THE SUBBASE IT SHALL MEET THE MASS HIGHWAY SPEC. M1.03.0 TYPE b OR M2.01.7

MONOLITHIC BITUMINOUS CONCRETE BERM DETAIL (CAPE COD BERM)

(NOT TO SCALE)

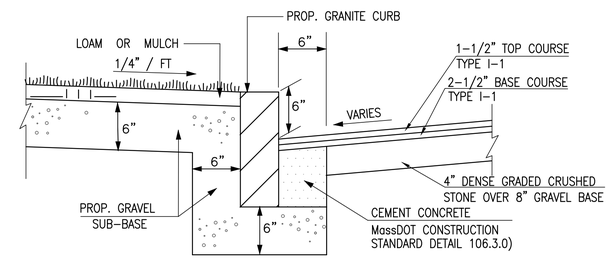

VERTICAL GRANITE CURB DETAIL

(NOT TO SCALE)

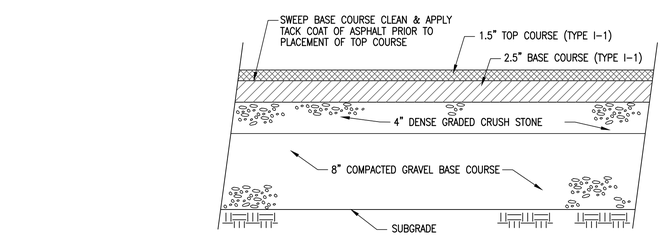

BITUMINOUS CONCRETE PAVEMENT

(NOT TO SCALE)

NOTE:
1. ALL UNSUITABLE MATERIAL SHALL BE REMOVED AND REPLACED WITH CLEAN GRAVEL BASE (95% COMPACTION)
2. ALL DRIVEWAY AND PARKING AREAS SHALL BE CONSTRUCTED IN ACCORDANCE WITH GEOTECHNICAL ENGINEERS SPECIFICATIONS.

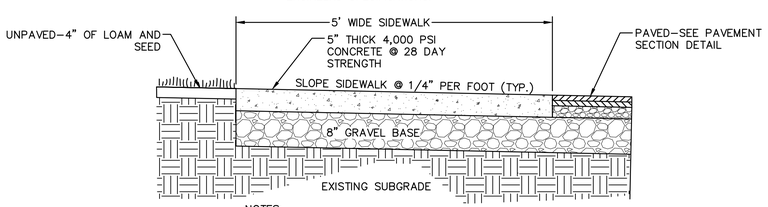

NOTES:
1. SIDEWALK TO HAVE TOOLED JOINTS 5' O.C. (TYP.) WITH EXPANSION JOINTS 15' ON CENTER AND PREMOLDED FILLER.
2. SEE PLAN FOR ELEVATIONS AT CURB CURB CONSTRUCTION
3. CUT NEAT LINE 6" FROM CURB LINE AND REMOVE BINDER, BASE AND STONE, REPLACE WITH CEMENT CONCRETE.

CONCRETE SIDEWALK DETAIL

(NOT TO SCALE)

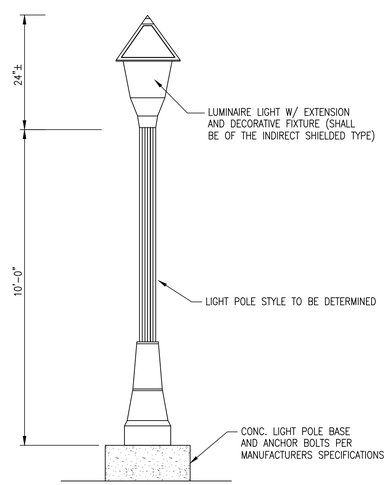

NOTE: ALL LIGHT SHALL BE REFLECTED DOWN TO PREVENT LIGHT POLLUTION AND SHALL BE DARK SKY COMPLIANT.

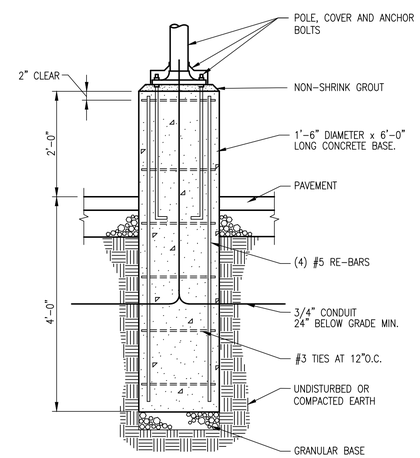

NOTES:
LIGHT POLE FOUNDATION DESIGN IS SUBJECT TO CHANGE BASED ON FINAL POLE AND FIXTURE SELECTION AND GEOTECHNICAL SITE INVESTIGATION.

LIGHT POLE FOUNDATION DETAIL

(NOT TO SCALE)

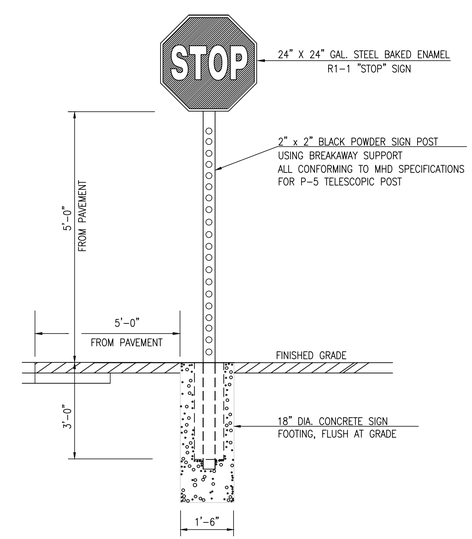

STOP SIGN DETAIL

(NOT TO SCALE)

COPYRIGHT © BY MERRILL CORPORATION
NO PART OF THIS DOCUMENT MAY BE REPRODUCED, STORED IN A RETRIEVAL SYSTEM, OR TRANSMITTED IN ANY FORM OR BY ANY MEANS, ELECTRONIC, MECHANICAL, PHOTOCOPYING, RECORDING OR OTHERWISE, WITHOUT THE EXPRESS WRITTEN CONSENT OF MERRILL CORPORATION WITH THE EXCEPTION OF ANY REGULATORY AUTHORITY WHICH MAY REPRODUCE IT IN CONJUNCTION WITH THE PERFORMANCE OF OFFICIAL BUSINESS UNDER ITS JURISDICTION. ANY MODIFICATIONS MADE TO THIS DOCUMENT WITHOUT THE EXPRESS WRITTEN CONSENT OF MERRILL CORPORATION SHALL RENDER IT UNUSABLE.

REVISIONS

1	4/30/21	REVIEW & COORDINATION

COMMONWEALTH OF MASSACHUSETTS
DEBORAH W. KELLER
CIVIL
No. 45314
REGISTERED PROFESSIONAL ENGINEER

DRAWN BY: JG

DESIGNED BY: DK

CHECKED BY: DK

Merrill Engineers and Land Surveyors
427 COLUMBIA ROAD, HANOVER, MA 02339 / T: (781) 826-9200
26 UNION STREET, PLYMOUTH MA 02360 / T: (508) 746-6060
WWW.MERRILLINC.COM

SITE PLAN

#15, 19, 27 & 35 HIGH STREET
NORWELL, MASSACHUSETTS 02061

OWNER/APPLICANT
NORTHLAND RESIDENTIAL CORPORATION
80 BEHARRELL STREET, SUITE E
CONCORD, MASSACHUSETTS 01742

JANUARY 29, 2021

SCALE: N.T.S.

JOB NO. 20-127

LATEST REVISION:
APRIL 30, 2021

CONSTRUCTION DETAILS

SHEET C6.1

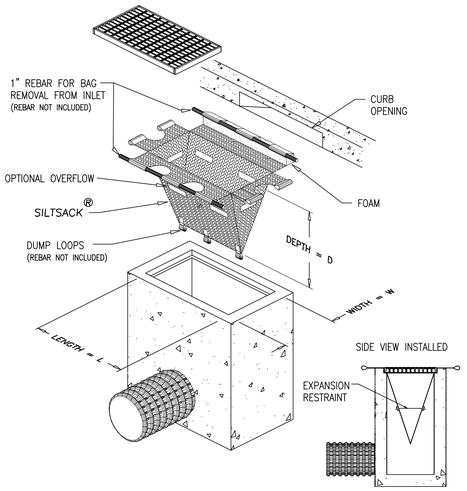

SILT SACK DETAIL

(NOT TO SCALE)

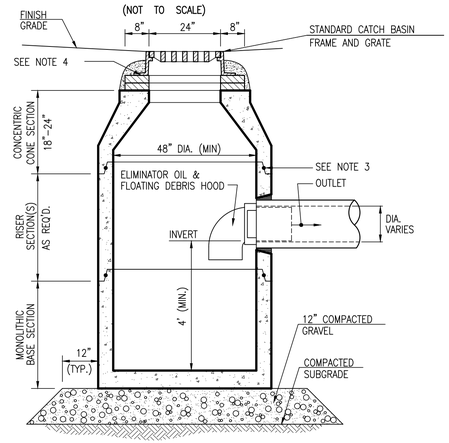

NOTES:

1. ALL SECTIONS SHALL BE DESIGNED FOR HS-20 LOADING.
2. PROVIDE "V" KNOCKOUTS FOR PIPES WITH 2" MAX. CLEARANCE TO OUTSIDE OF PIPE. MORTAR ALL PIPE CONNECTIONS.
3. JOINT SEALANT BETWEEN PRECAST SECTIONS SHALL BE PREFORMED BUTYL RUBBER.
4. CATCH BASIN FRAME AND GRATE SHALL BE SET IN FULL MORTAR BED. ADJUST TO GRADE WITH CLAY BRICK AND MORTAR (2 BRICK COURSES TYPICALLY, 5 BRICK COURSES MAXIMUM)

PRECAST CATCH BASIN DETAIL

(NOT TO SCALE)

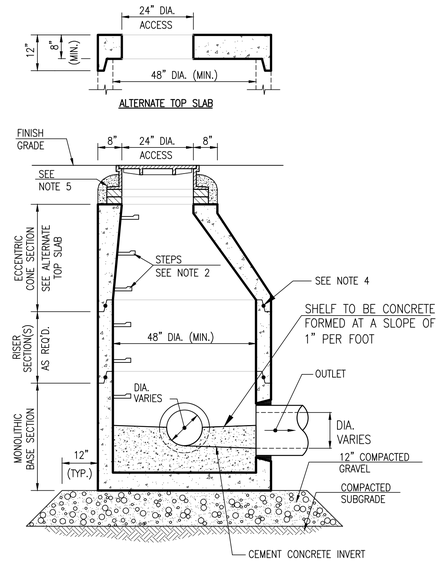

NOTES:

1. ALL SECTIONS SHALL BE DESIGNED FOR HS-20 LOADING.
2. COPOLYMER MANHOLE STEPS SHALL BE INSTALLED AT 12" O.C. FOR THE FULL DEPTH OF THE STRUCTURE.
3. PROVIDE "V" KNOCKOUTS FOR PIPES WITH 2" MAX. CLEARANCE TO OUTSIDE OF PIPE. MORTAR ALL PIPE CONNECTIONS.
4. JOINT SEALANT BETWEEN PRECAST SECTIONS SHALL BE PREFORMED BUTYL RUBBER.
5. DRAIN MANHOLE FRAME AND COVER SHALL BE SET IN FULL MORTAR BED. ADJUST TO GRADE WITH CLAY BRICK AND MORTAR (2 BRICK COURSES TYPICALLY, 5 BRICK COURSES MAXIMUM)

PRECAST CONCRETE MANHOLE DETAIL

(NOT TO SCALE)

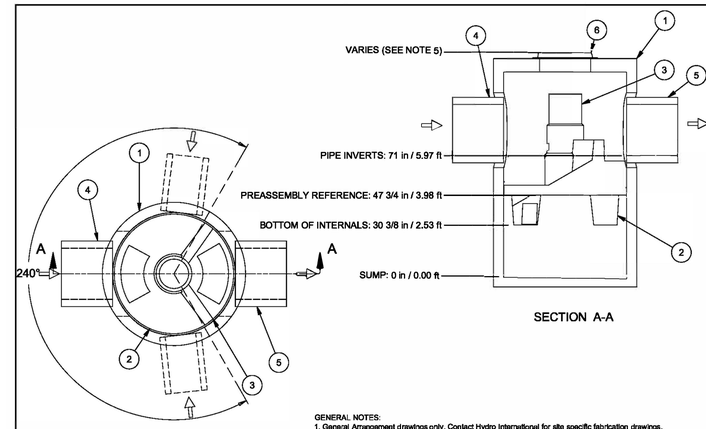

Parts List		
ITEM	SIZE (in)	DESCRIPTION
1	72	I.D. PRECAST MANHOLE
2		LEDGER SUPPORT
3		SEPARATION MODULE
4	18 ~~30~~	INLET PIPE (BY OTHERS)
5	18 ~~30~~	OUTLET PIPE (BY OTHERS)
6	30	FRAME AND COVER (OR GRATE) (ROUND)

GENERAL NOTES:
1. General Arrangement drawings only. Contact Hydro International for site specific fabrication drawings.
2. The maximum diameter of the inlet & outlet pipes is 30". For pipes larger than 30", please contact Hydro International for additional design assistance.
3. Multiple inlet pipes possible (refer to project plans).
4. Inlet/outlet pipe angle can vary to align with drainage network (refer to project plans).
5. Peak flow rate and minimum height limited by available cover and pipe diameter.
6. Larger sediment storage capacity may be provided with a deeper sump depth.

PRODUCT SPECIFICATIONS:
A. The treatment system shall use an induced vortex to separate pollutants from stormwater runoff.
B. The treatment system shall fit within the limits of excavation (area and depth) as shown in the project plans and will not exceed the dimensions for the design flow rates specified herein.
C. The treatment system shall remove greater than or equal to 80% of TSS based on the Target Particle Size (TPS) of 108 microns and/or 80% of TSS based on the TPS of 230 microns at 2.2 cfs and 3.8 cfs, respectively.
D. The treatment system shall convey the Peak On-line Flow Rates of up to 32 cfs without causing upstream surcharge conditions. Full-scale independent laboratory scour testing shall demonstrate effluent control of less than or equal to 5 mg/L for all flows up to 200% of MTFR-108.
E. The treatment system shall be capable of capturing and retaining fine silt and sand size particles. Analysis of captured sediment from full-scale field installations shall demonstrate particle sizes predominately in the 20-micron range

© 2008 Hydro International
Any warranty made by Hydro International only applies to those items supplied by it. Hydro International does not accept and expressly disclaims any responsibility or liability for any structure, plant or equipment (or the performance thereof) designed, built, manufactured or supplied by any third-party. Hydro International has a policy of continuous product development and reserves the right to amend the specifications of any of its products or equipment at any time. Hydro International expressly disclaims any liability for the performance of its equipment (or any part thereof) used or made subject to conditions outside of the conditions set forth in Hydro International's design specifications. Hydro International owns the copyright in and to this drawing, which is supplied in confidence, and all intended recipients of the drawing, by their use thereof, agree to hold the drawing in confidence and not to use it for any purpose other than for which it was supplied and not reproduce, in whole or in part, the drawing or any of the equipment or structures depicted therein, without prior written permission of Hydro International.

Notes
1. MANHOLE WALL AND SLAB THICKNESSES ARE NOT TO SCALE.
2. CONTACT HYDRO INTERNATIONAL FOR A BOTTOM OF STRUCTURE ELEVATION PRIOR TO SETTING FIRST DEFENSE MANHOLE.
3. CONTRACTOR TO CONFIRM RIM, PIPE INVERTS, PIPE DIA. AND PIPE ORIENTATION PRIOR TO RELEASE OF UNIT TO FABRICATION.

REV	BY	DATE	DESCRIPTION
A	JL	11/5/15	SUMP DEPTH

REVISION HISTORY

Date	Scale
11/25/14	1/4" = 1'0"

Drawn	Checked	Approved
RC		

Title
6-FT DIAMETER
FIRST DEFENSE

HIGH CAPACITY
GENERAL ARRANGEMENT

Hydro International

Stormwater Solutions
94 Hutchins Drive
Portland, Maine 04102
Tel: (207) 756-6200
Fax: (207) 756-6212
stormwaterinquiry@hydro-int.com

CAD Ref: F6HC-MAX
Project No. xx-xxxx
Drawing No. F6HCS1 Rev. A

FIRST DEFENSE HIGH CAPACITY PRETREATMENT UNIT (FD-6HC) – FD3

(DESIGNED FOR H-20 LOADING)
(NOT TO SCALE)

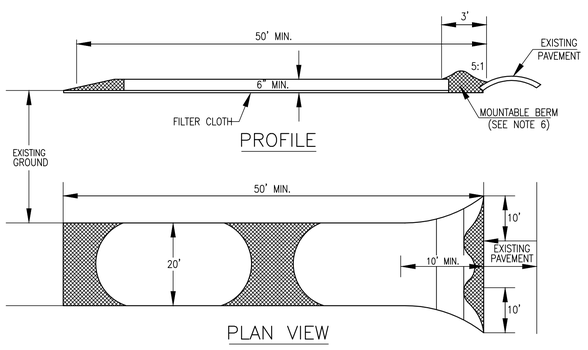

STABILIZED CONSTRUCTION ENTRANCE

(NOT TO SCALE)

SPECIFICATIONS

1. STONE SIZE – USE 2" STONE, OR RECLAIMED OR RECYCLED CONCRETE EQUIVALENT.
2. LENGTH – AS REQUIRED, BUT NOT LESS THAN 50 FT.(EXCEPT ON A SINGLE RESIDENCE LOT WHERE A 30' MINIMUM LENGTH WOULD APPLY).
3. THICKNESS – NOT LESS THAN SIX (6) INCHES.
4. WIDTH – TEN (10) FOOT MINIMUM, BUT NOT LESS THAN THE FULL WIDTH AT POINTS WHERE INGRESSOR EGRESS OCCURS.
5. FILTER CLOTH – WILL BE PLACED OVER THE ENTIRE AREA PRIOR TO PLACING OF STONE. FILTER WILL NOT BE REQUIRED ON A SINGLE FAMILY RESIDENCE LOT.
6. SURFACE WATER – ALL SURFACE WATER FLOWING OR DIVERTED TOWARD CONSTRUCTION ENTRANCES SHALL BE PIPED ACROSS THE ENTRANCE. IF PIPING IS IMPRACTICAL, A MOUNTABLE BERM WITH 5:1 SLOPES WILL BE PERMITTED.
7. MAINTENANCE – THE ENTRANCE SHALL BE MAINTAINED IN A CONDITION WHICH WILL PREVENT TRACKING OR FLOWING OF SEDIMENT ONTO PUBLIC RIGHTS-OF-WAY. THIS MAY REQUIRE PERIODIC TOP DRESSING WITH ADDITIONAL STONE AS CONDITIONS DEMAND AND REPAIR AND/OR CLEANOUT OF ANY MEASURES USED TO TRAP SEDIMENT. ALL SEDIMENT SPILLED, DROPPED, WASHED OR TRACKED ONTO PUBLIC RIGHTS-OF-WAYS MUST BE REMOVED IMMEDIATELY.
8. WASHING – WHEELS SHALL BE CLEANED TO REMOVE SEDIMENT PRIOR TO ENTRANCE ONTO PUBLIC RIGHTS OF WAY. WHEN WASHING IS REQUIRED, IT SHALL BE DONE ON AN AREA STABILIZED WITH STONE AND WHICH DRAINS INTO AN APPROVED SEDIMENT TRAPPING DEVICE.
9. PERIODIC INSPECTION AND NEEDED MAINTENANCE SHALL BE PROVIDED AFTER EACH RAIN.

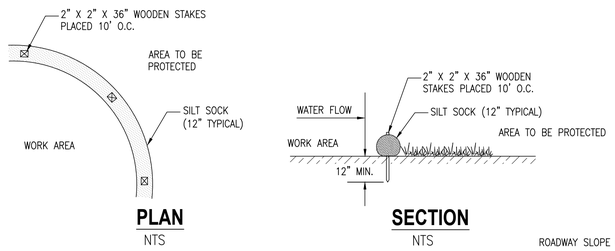

NOTE: REFER TO THE PLAN FOR PROPOSED LOCATION.

SILT SOCK DETAIL

(NOT TO SCALE)

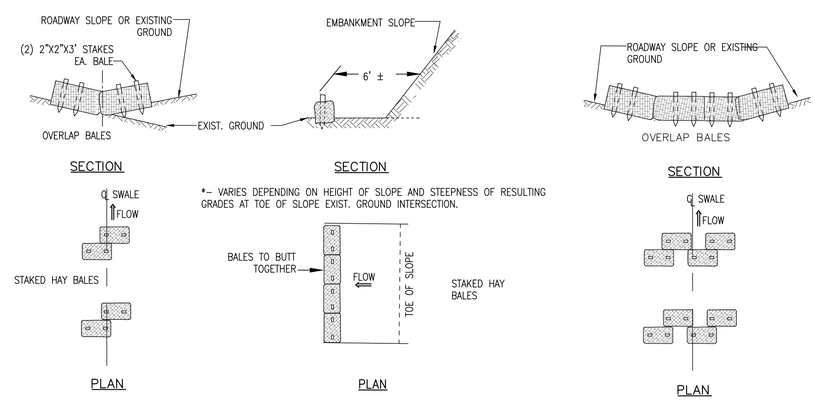

NOTE: TO BE USED IN LOCATIONS WHERE EXIST. GROUND SLOPES IN TOWARD THE TOE OF THE EMBANKMENT. OR IN NARROW DITCHES.

NOTE: TO BE USED WHERE EXIST. GROUND SLOPES AWAY FROM THE TOE OF THE EMBANKMENT.

NOTE: TO BE USED IN LOCATIONS WHERE EXIST. GROUND SLOPES IN TOWARD THE TOE OF THE EMBANKMENT. OR IN WIDE DITCHES.

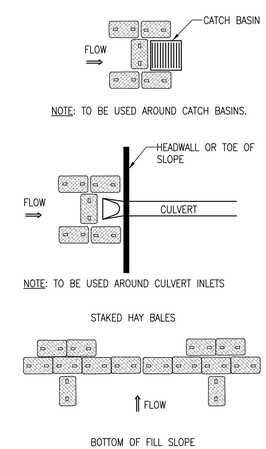

NOTE: TO BE USED AROUND CATCH BASINS.

NOTE: TO BE USED AROUND CULVERT INLETS

NOTE: TO BE USED AT BOTTOM OF FILL SLOPE WHERE HEAVY FLOW MAY BE ANTICIPATED

TEMPORARY EROSION CONTROL DETAILS

(NOT TO SCALE)

COPYRIGHT © BY MERRILL CORPORATION
NO PART OF THIS DOCUMENT MAY BE REPRODUCED, STORED IN A RETRIEVAL SYSTEM, OR TRANSMITTED IN ANY FORM OR BY ANY MEANS, ELECTRONIC, MECHANICAL, PHOTOCOPYING, RECORDING OR OTHERWISE, WITHOUT THE EXPRESS WRITTEN CONSENT OF MERRILL CORPORATION WITH THE EXCEPTION OF ANY REGULATORY AUTHORITY WHICH MAY REPRODUCE IT IN CONJUNCTION WITH THE PERFORMANCE OF OFFICIAL BUSINESS UNDER ITS JURISDICTION. ANY MODIFICATIONS MADE TO THIS DOCUMENT WITHOUT THE EXPRESS WRITTEN CONSENT OF MERRILL CORPORATION SHALL RENDER IT UNUSABLE.

REVISIONS

1	4/30/21	REVIEW & COORDINATION

COMMONWEALTH OF MASSACHUSETTS
DEBORAH W. KELLER
CIVIL
No. 45374
REGISTERED PROFESSIONAL ENGINEER

DRAWN BY: JG

DESIGNED BY: DK

CHECKED BY: DK

Merrill Engineers and Land Surveyors
427 COLUMBIA ROAD, HANOVER, MA 02339 / T: (781) 826-9200
26 UNION STREET, PLYMOUTH MA 02360 / T: (508) 746-6060
WWW.MERRILLINC.COM

SITE PLAN
#15, 19, 27 & 35 HIGH STREET
NORWELL, MASSACHUSETTS 02061

OWNER/APPLICANT
NORTHLAND RESIDENTIAL CORPORATION
80 BEHARRELL STREET, SUITE E
CONCORD, MASSACHUSETTS 01742

JANUARY 29, 2021

SCALE: N.T.S.

JOB NO. 20-127

LATEST REVISION:
APRIL 30, 2021

CONSTRUCTION DETAILS

SHEET C6.2

ACCEPTABLE FILL MATERIALS: STORMTECH MC-3500 CHAMBER SYSTEMS

MATERIAL LOCATION		DESCRIPTION	AASHTO MATERIAL CLASSIFICATIONS	COMPACTION / DENSITY REQUIREMENT
D	**FINAL FILL:** FILL MATERIAL FOR LAYER 'D' STARTS FROM THE TOP OF THE 'C' LAYER TO THE BOTTOM OF FLEXIBLE PAVEMENT OR UNPAVED FINISHED GRADE ABOVE. NOTE THAT PAVEMENT SUBBASE MAY BE PART OF THE 'D' LAYER	ANY SOIL/ROCK MATERIALS, NATIVE SOILS, OR PER ENGINEER'S PLANS. CHECK PLANS FOR PAVEMENT SUBGRADE REQUIREMENTS.	N/A	PREPARE PER SITE DESIGN ENGINEER'S PLANS. PAVED INSTALLATIONS MAY HAVE STRINGENT MATERIAL AND PREPARATION REQUIREMENTS.
C	**INITIAL FILL:** FILL MATERIAL FOR LAYER 'C' STARTS FROM THE TOP OF THE EMBEDMENT STONE ('B' LAYER) TO 24" (600 mm) ABOVE THE TOP OF THE CHAMBER. NOTE THAT PAVEMENT SUBBASE MAY BE A PART OF THE 'C' LAYER.	GRANULAR WELL-GRADED SOIL/AGGREGATE MIXTURES, <35% FINES OR PROCESSED AGGREGATE. MOST PAVEMENT SUBBASE MATERIALS CAN BE USED IN LIEU OF THIS LAYER.	AASHTO M145[1] A-1, A-2-4, A-3 OR AASHTO M43[1] 3, 357, 4, 467, 5, 56, 57, 6, 67, 68, 7, 78, 8, 89, 9, 10	BEGIN COMPACTIONS AFTER 24" (600 mm) OF MATERIAL OVER THE CHAMBERS IS REACHED. COMPACT ADDITIONAL LAYERS IN 12" (300 mm) MAX LIFTS TO A MIN. 95% PROCTOR DENSITY FOR WELL GRADED MATERIAL AND 95% RELATIVE DENSITY FOR PROCESSED AGGREGATE MATERIALS.
B	**EMBEDMENT STONE:** FILL SURROUNDING THE CHAMBERS FROM THE FOUNDATION STONE ('A' LAYER) TO THE 'C' LAYER ABOVE.	CLEAN, CRUSHED, ANGULAR STONE	AASHTO M43[1] 3, 4	NO COMPACTION REQUIRED.
A	**FOUNDATION STONE:** FILL BELOW CHAMBERS FROM THE SUBGRADE UP TO THE FOOT (BOTTOM) OF THE CHAMBER.	CLEAN, CRUSHED, ANGULAR STONE	AASHTO M43[1] 3, 4	PLATE COMPACT OR ROLL TO ACHIEVE A FLAT SURFACE.[2,3]

PLEASE NOTE:

1. THE LISTED AASHTO DESIGNATIONS ARE FOR GRADATIONS ONLY. THE STONE MUST ALSO BE CLEAN, CRUSHED, ANGULAR. FOR EXAMPLE, A SPECIFICATION FOR #4 STONE WOULD STATE: "CLEAN, CRUSHED, ANGULAR NO. 4 (AASHTO M43) STONE".
2. STORMTECH COMPACTION REQUIREMENTS ARE MET FOR 'A' LOCATION MATERIALS WHEN PLACED AND COMPACTED IN 9" (230 mm) (MAX) LIFTS USING TWO FULL COVERAGES WITH A VIBRATORY COMPACTOR.
3. WHERE INFILTRATION SURFACES MAY BE COMPROMISED BY COMPACTION, FOR STANDARD DESIGN LOAD CONDITIONS, A FLAT SURFACE MAY BE ACHIEVED BY RAKING OR DRAGGING WITHOUT COMPACTION EQUIPMENT. FOR SPECIAL LOAD DESIGNS, CONTACT STORMTECH FOR COMPACTION REQUIREMENTS.

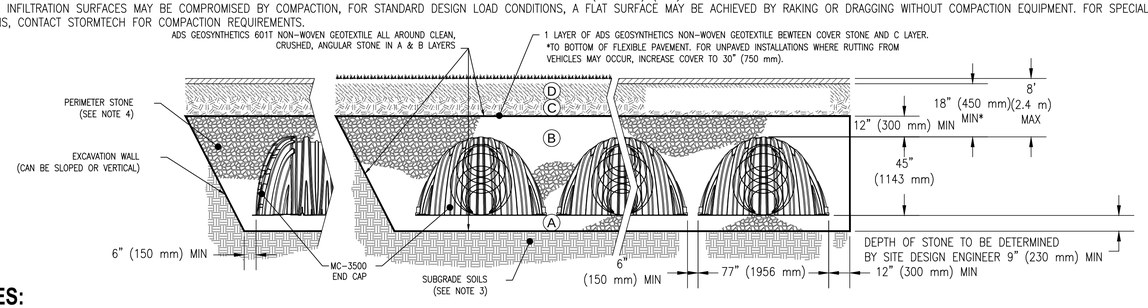

NOTES:

1. CHAMBERS SHALL MEET THE REQUIREMENTS OF ASTM F2418-16a, "STANDARD SPECIFICATION FOR POLYPROPYLENE (PP) CORRUGATED WALL STORMWATER COLLECTION CHAMBERS" CHAMBER CLASSIFICATION 45x76 DESIGNATION SS.
2. MC-3500 CHAMBERS SHALL BE DESIGNED IN ACCORDANCE WITH ASTM F2787 "STANDARD PRACTICE FOR STRUCTURAL DESIGN OF THERMOPLASTIC CORRUGATED WALL STORMWATER COLLECTION CHAMBERS".
3. THE SITE DESIGN ENGINEER IS RESPONSIBLE FOR ASSESSING THE BEARING RESISTANCE (ALLOWABLE BEARING CAPACITY) OF THE SUBGRADE SOILS AND THE DEPTH OF FOUNDATION STONE WITH CONSIDERATION FOR THE RANGE OF EXPECTED SOIL MOISTURE CONDITIONS.
4. PERIMETER STONE MUST BE EXTENDED HORIZONTALLY TO THE EXCAVATION WALL FOR BOTH VERTICAL AND SLOPED EXCAVATION WALLS.
5. REQUIREMENTS FOR HANDLING AND INSTALLATION:
   - TO MAINTAIN THE WIDTH OF CHAMBERS DURING SHIPPING AND HANDLING, CHAMBERS SHALL HAVE INTEGRAL, INTERLOCKING STACKING LUGS.
   - TO ENSURE A SECURE JOINT DURING INSTALLATION AND BACKFILL, THE HEIGHT OF THE CHAMBER JOINT SHALL NOT BE LESS THAN 3".
   - TO ENSURE THE INTEGRITY OF THE ARCH SHAPE DURING INSTALLATION, a) THE ARCH STIFFNESS CONSTANT AS DEFINED IN SECTION 6.2.8 OF ASTM F2418 SHALL BE GREATER THAN OR EQUAL TO 500 LBS/IN/IN. AND b) TO RESIST CHAMBER DEFORMATION DURING INSTALLATION AT ELEVATED TEMPERATURES (ABOVE 73° F / 23° C), CHAMBERS SHALL BE PRODUCED FROM REFLECTIVE GOLD OR YELLOW COLORS.

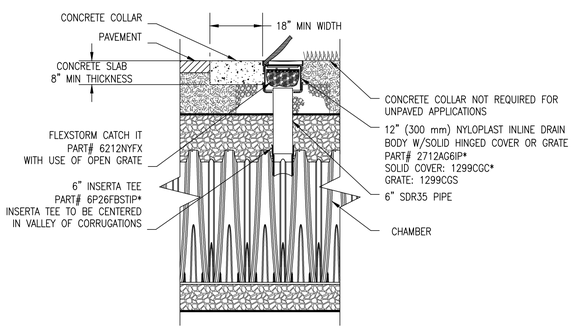

* THE PART# 2712AG6IPKIT CAN BE USED TO ORDER ALL NECESSARY COMPONENTS FOR A SOLID LID INSPECTION PORT INSTALLATION

6" INSPECTION PORT DETAIL
(NOT TO SCALE)

INSPECTION & MAINTENANCE

STEP 1) INSPECT ISOLATOR ROW FOR SEDIMENT
- A. INSPECTION PORTS (IF PRESENT)
  - A.1. REMOVE/OPEN LID ON NYLOPLAST INLINE DRAIN
  - A.2. REMOVE AND CLEAN FLEXSTORM FILTER IF INSTALLED
  - A.3. USING A FLASHLIGHT AND STADIA ROD, MEASURE DEPTH OF SEDIMENT AND RECORD ON MAINTENANCE LOG
  - A.4. LOWER A CAMERA INTO ISOLATOR ROW FOR VISUAL INSPECTION OF SEDIMENT LEVELS (OPTIONAL)
  - A.5. IF SEDIMENT IS AT, OR ABOVE, 3" (80 mm) PROCEED TO STEP 2. IF NOT, PROCEED TO STEP 3.
- B. ALL ISOLATOR ROWS
  - B.1. REMOVE COVER FROM STRUCTURE AT UPSTREAM END OF ISOLATOR ROW
  - B.2. USING A FLASHLIGHT, INSPECT DOWN THE ISOLATOR ROW THROUGH OUTLET PIPE
    - i) MIRRORS ON POLES OR CAMERAS MAY BE USED TO AVOID A CONFINED SPACE ENTRY
    - ii) FOLLOW OSHA REGULATIONS FOR CONFINED SPACE ENTRY IF ENTERING MANHOLE
  - B.3. IF SEDIMENT IS AT, OR ABOVE, 3" (80 mm) PROCEED TO STEP 2. IF NOT, PROCEED TO STEP 3.

STEP 2) CLEAN OUT ISOLATOR ROW USING THE JETVAC PROCESS
- A. A FIXED CULVERT CLEANING NOZZLE WITH REAR FACING SPREAD OF 45" (1.1 m) OR MORE IS PREFERRED
- B. APPLY MULTIPLE PASSES OF JETVAC UNTIL BACKFLUSH WATER IS CLEAN
- C. VACUUM STRUCTURE SUMP AS REQUIRED

STEP 3) REPLACE ALL COVERS, GRATES, FILTERS, AND LIDS; RECORD OBSERVATIONS AND ACTIONS.

STEP 4) INSPECT AND CLEAN BASINS AND MANHOLES UPSTREAM OF THE STORMTECH SYSTEM.

NOTES

1. INSPECT EVERY 6 MONTHS DURING THE FIRST YEAR OF OPERATION. ADJUST THE INSPECTION INTERVAL BASED ON PREVIOUS OBSERVATIONS OF SEDIMENT ACCUMULATION AND HIGH WATER ELEVATIONS.
2. CONDUCT JETTING AND VACTORING ANNUALLY OR WHEN INSPECTION SHOWS THAT MAINTENANCE IS NECESSARY.

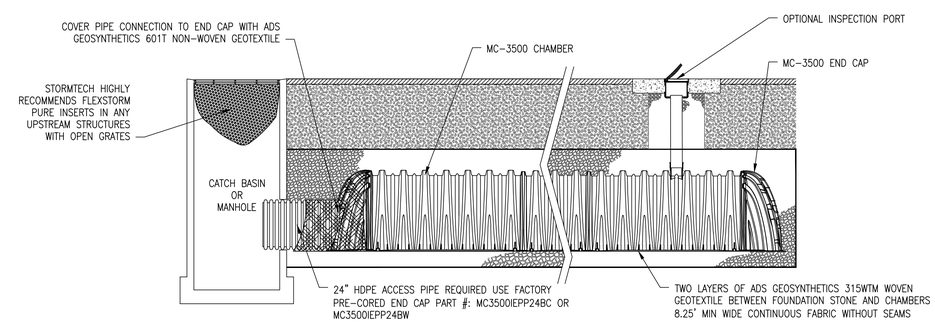

MC-3500 ISOLATOR ROW DETAIL
(NOT TO SCALE)

COPYRIGHT © BY MERRILL CORPORATION
NO PART OF THIS DOCUMENT MAY BE REPRODUCED, STORED IN A RETRIEVAL SYSTEM, OR TRANSMITTED IN ANY FORM OR BY ANY MEANS, ELECTRONIC, MECHANICAL, PHOTOCOPYING, RECORDING OR OTHERWISE, WITHOUT THE EXPRESS WRITTEN CONSENT OF MERRILL CORPORATION WITH THE EXCEPTION OF ANY REGULATORY AUTHORITY WHICH MAY REPRODUCE IT IN CONJUNCTION WITH THE PERFORMANCE OF OFFICIAL BUSINESS UNDER ITS JURISDICTION. ANY MODIFICATIONS MADE TO THIS DOCUMENT WITHOUT THE EXPRESS WRITTEN CONSENT OF MERRILL CORPORATION SHALL RENDER IT UNUSABLE.

REVISIONS

1	4/30/21	REVIEW & COORDINATION

COMMONWEALTH OF MASSACHUSETTS
DEBORAH W. KELLER
CIVIL
No. 45314
REGISTERED PROFESSIONAL ENGINEER

DRAWN BY: JG

DESIGNED BY: DK

CHECKED BY: DK

Merrill Engineers and Land Surveyors
427 COLUMBIA ROAD, HANOVER, MA 02339 / T: (781) 826-9200
26 UNION STREET, PLYMOUTH MA 02360 / T: (508) 746-6060
WWW.MERRILLINC.COM

SITE PLAN
#15, 19, 27 & 35 HIGH STREET
NORWELL, MASSACHUSETTS 02061

OWNER/APPLICANT
NORTHLAND RESIDENTIAL CORPORATION
80 BEHARRELL STREET, SUITE E
CONCORD, MASSACHUSETTS 01742

JANUARY 29, 2021

SCALE: N.T.S.

JOB NO. 20-127

LATEST REVISION:
APRIL 30, 2021

CONSTRUCTION DETAILS

SHEET C6.3

NOTE:

1. TAPPING SADDLES ARE NOT ALLOWED FOR MAIN-ON-MAIN TAPS.
2. USE MUELLER OR AMERICAN DARLING DUCTILE IRON OR 316 STAINLESS STEEL TAPPING SLEEVES FOR TAP SIZES 4" - 24".
3. USE 316 STAINLESS STEEL TAPPING SLEEVES BY DRESSER OR CASCADE FOR TAPS ON MAINS 30" AND GREATER.
4. BOLTS AND NUTS FOR ALL TAPPING SLEEVES SHALL BE 316 SS.
5. USE THRUST BLOCKING ONLY FOR WET TAPS UNLESS OTHERWISE APPROVED BY CPW.
6. DEPTH FROM GROUND SURFACE TO TOP OF BLOCKING SHALL BE GREATER THAN HEIGHT OF BLOCKING.
7. THE END OF THE TAPPING SLEEVE SHALL BE NO CLOSER THAN 4 FEET TO A JOINT.

TAPPING SLEEVE DETAIL

(NOT TO SCALE)

* CONSULT DPW PRIOR TO PURCHASING ANY WATER MAIN MATERIALS. COMPLETE INSTALLATION IN ACCORDANCE TO DPW REQUIREMENTS

TAP SIZE	DIMENSIONS IN FT		
	W	H	D
4" & 6"	2.0	1.4	1.0
8"	3.5	2.0	1.4
10"	4.0	2.5	1.8
12"	5.0	3.0	2.5

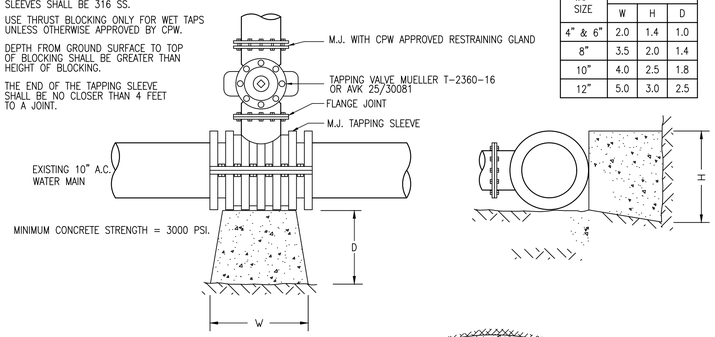

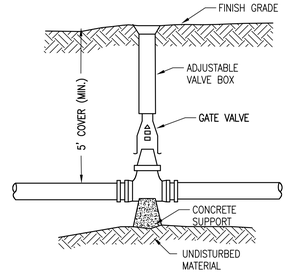

NOTE: ALL VALVES SHALL OPEN RIGHT

WATER GATE DETAIL

(NOT TO SCALE)

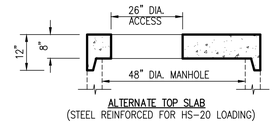

ALTERNATE TOP SLAB
(STEEL REINFORCED FOR HS-20 LOADING)

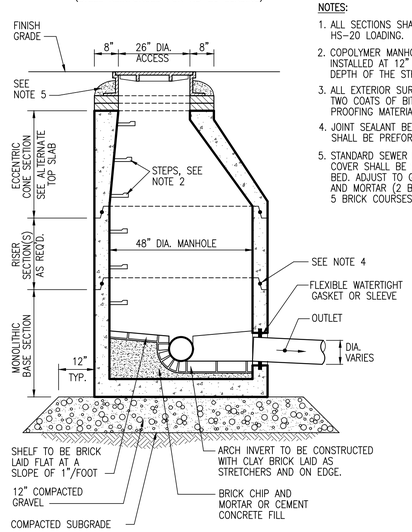

SEWER MANHOLE DETAIL

(NOT TO SCALE)

NOTES:

1. ALL SECTIONS SHALL BE DESIGNED FOR HS-20 LOADING.
2. COPOLYMER MANHOLE STEPS SHALL BE INSTALLED AT 12" O.C. FOR THE FULL DEPTH OF THE STRUCTURE.
3. ALL EXTERIOR SURFACES SHALL BE GIVEN TWO COATS OF BITUMINOUS WATER-PROOFING MATERIAL.
4. JOINT SEALANT BETWEEN PRECAST SECTIONS SHALL BE PREFORMED BUTYL RUBBER.
5. STANDARD SEWER MANHOLE FRAME AND COVER SHALL BE SET IN FULL MORTAR BED. ADJUST TO GRADE WITH CLAY BRICK AND MORTAR (2 BRICK COURSES TYPICALLY, 5 BRICK COURSES MAXIMUM)

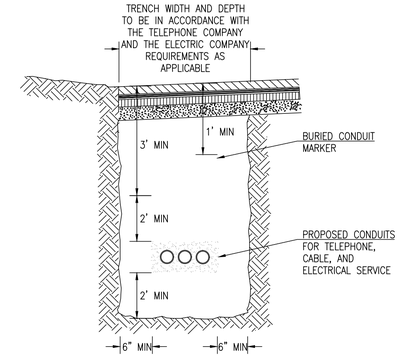

TYPICAL ELECTRIC/TELEPHONE/CABLE CONDUIT (US-UTILITY SERVICE) DETAIL

(NOT TO SCALE)

TYPICAL WATER CROSSING DETAIL

(NOT TO SCALE)

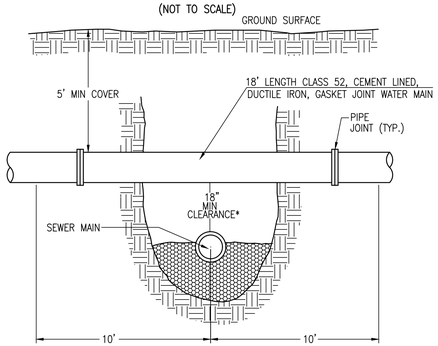

* WHEN THE CROSSING AS SHOWN IS LESS THAN 18" VERTICAL CLEARANCE THE SEWER MAIN OR SERVICE MUST BE ENCASED 10' ON BOTH SIDES OF CROSSING WITH 6" OF 3000 PSI CONCRETE IF THE SEWER MAIN OR SERVICE CROSSES ABOVE THE WATERMAIN OR SERVICE TOTAL ENCASEMENT, BOTH SIDES OF THE CROSSING IS REQUIRED, REGARDLESS OF SEPARATION.

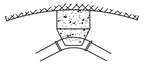

WATERMAIN BEND PLAN

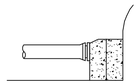

PLUG ELEVATION

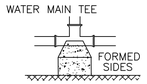

TEE-PLAN/TAPPING SLEEVE

PRECAST CONCRETE BLOCK PLACED AGAINST UNDISTURBED MATERIAL AND OR STONE (LARGE DIAMETER)

NOTE:

1. CONCRETE FOR THRUST BLOCKS SHALL HAVE A MINIMUM COMPRESSIVE STRENGTH OF 1500 P.S.I. AT 28 DAYS
2. THRUST BLOCK BEARING AREAS TO BE IN ACCORDANCE WITH TABLE BELOW, UNLESS DETERMINED OTHERWISE BY THE ENGINEER BECAUSE OF SOIL CONDITIONS.
3. NO CONCRETE SHALL BE POURED IN PLACE WITHOUT APPROVAL OF ENGINEER.

TABLE OF BEARING AREAS (S.F.)

SIZE OF MAIN(IN)	90° BEND	TEES & PLUGS	45° BEND
8	5	4	3

THRUST BLOCK DETAILS

(NOT TO SCALE)

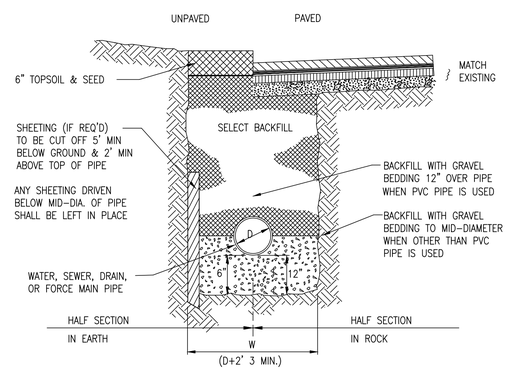

TYPICAL UTILITY TRENCH DETAIL

(NOT TO SCALE)

UTILITY NOTES:

1. THE CONTRACTOR SHALL INSTALL ALL UTILITIES IN ACCORDANCE WITH LOCAL UTILITY PURVEYOR REQUIREMENTS. REPRESENTATIVES FROM THE LOCAL UTILITY PURVEYOR SHALL BE CONTACTED PRIOR TO CONSTRUCTION TO REVIEW THE PROPOSED CONSTRUCTION MATERIALS AND LOCATIONS.
2. ALL UNDERGROUND UTILITIES SHALL BE INSTALLED AND INSPECTED AND WRITTEN APPROVAL OBTAINED BEFORE CONSTRUCTION OF THE ROADWAY BASE COURSE BEGINS.
3. THE SEWER SYSTEM TESTING SHALL OCCUR PRIOR TO ACTIVATION AND WILL INCLUDE PRESSURE TESTING, MANHOLE VACUUM TESTING, AND MANDREL DEFLECTION TESTING.
4. THE WATER SYSTEM TESTING SHALL OCCUR PRIOR TO ACTIVATION AND WILL INCLUDE PRESSURE TESTING, CHLORINATION AND BACTERIOLOGICAL SAMPLING PER NORWELL DPW STANDARDS.

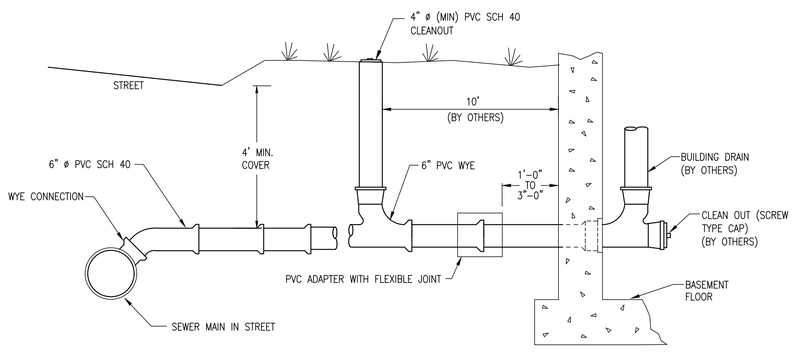

HOUSE SEWER: MINIMUM SLOPE 1/4" PER FOOT

TYPICAL BUILDING SEWER CONNECTION DETAIL

(NOT TO SCALE)

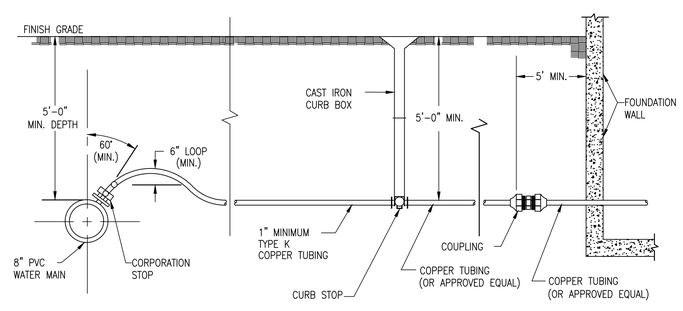

NOTE:
VERIFY MATERIALS AND TAPPING AND INSTALLATION REQUIREMENTS WITH THE TOWN OF NORWELL WATER DEPARTMENT.

WATER SERVICE DETAIL

(NOT TO SCALE)

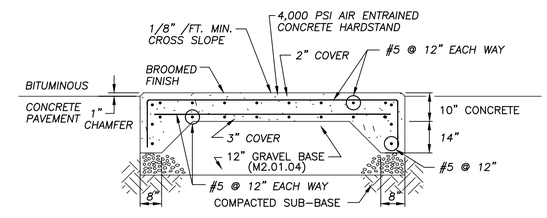

DUMPSTER PAD DETAIL DETAIL

(NOT TO SCALE)

NOTES:

1) LOCATIONS PER SITE PLAN
2) PROVIDE 1/2" DEEP CONTROL JOINTS AT 5' O.C.
3) PROVIDE CONSTRUCTION JOINT WITH 1/4" PREMOLDED 6" EXPANSION JOINT FILLER AT 25' O.C.

COPYRIGHT © BY MERRILL CORPORATION
NO PART OF THIS DOCUMENT MAY BE REPRODUCED, STORED IN A RETRIEVAL SYSTEM, OR TRANSMITTED IN ANY FORM OR BY ANY MEANS, ELECTRONIC, MECHANICAL, PHOTOCOPYING, RECORDING OR OTHERWISE, WITHOUT THE EXPRESS WRITTEN CONSENT OF MERRILL CORPORATION WITH THE EXCEPTION OF ANY REGULATORY AUTHORITY WHICH MAY REPRODUCE IT IN CONJUNCTION WITH THE PERFORMANCE OF OFFICIAL BUSINESS UNDER ITS JURISDICTION. ANY MODIFICATIONS MADE TO THIS DOCUMENT WITHOUT THE EXPRESS WRITTEN CONSENT OF MERRILL CORPORATION SHALL RENDER IT UNUSABLE.

REVISIONS

1	4/30/21	REVIEW & COORDINATION

COMMONWEALTH OF MASSACHUSETTS
DEBORAH W. KELLER
CIVIL
No. 45314
REGISTERED PROFESSIONAL ENGINEER

DRAWN BY: JG

DESIGNED BY: DK

CHECKED BY: DK

Merrill Engineers and Land Surveyors
427 COLUMBIA ROAD, HANOVER, MA 02339 / T: (781) 826-9200
26 UNION STREET, PLYMOUTH MA 02360 / T: (508) 746-6060
WWW.MERRILLINC.COM

SITE PLAN
#15, 19, 27 & 35 HIGH STREET
NORWELL, MASSACHUSETTS 02061

OWNER/APPLICANT
NORTHLAND RESIDENTIAL CORPORATION
80 BEHARRELL STREET, SUITE E
CONCORD, MASSACHUSETTS 01742

JANUARY 29, 2021

SCALE: N.T.S.

JOB NO. 20-127

LATEST REVISION:
APRIL 30, 2021

CONSTRUCTION DETAILS

SHEET C6.4

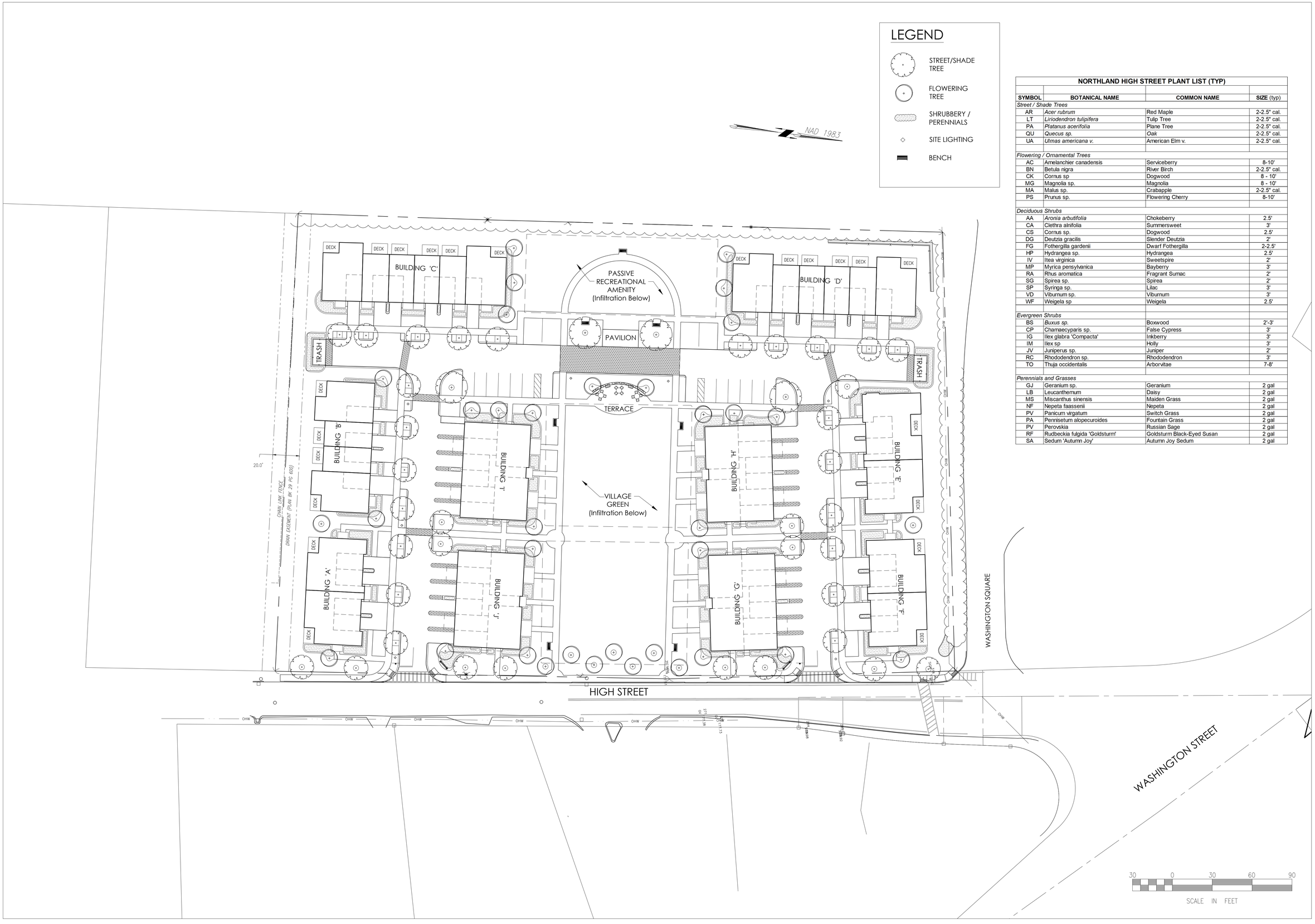

NORTHLAND HIGH STREET PLANT LIST (TYP)

SYMBOL	BOTANICAL NAME	COMMON NAME	SIZE (typ)
Street / Shade Trees			
AR	*Acer rubrum*	Red Maple	2-2.5" cal.
LT	*Liriodendron tulipifera*	Tulip Tree	2-2.5" cal.
PA	*Platanus acerifolia*	Plane Tree	2-2.5" cal.
QU	*Quecus sp.*	*Oak*	2-2.5" cal.
UA	*Ulmas americana v.*	American Elm v.	2-2.5" cal.
Flowering / Ornamental Trees			
AC	Amelanchier canadensis	Serviceberry	8-10'
BN	Betula nigra	River Birch	2-2.5" cal.
CK	Cornus sp	Dogwood	8 - 10'
MG	Magnolia sp.	Magnolia	8 - 10'
MA	Malus sp.	Crabapple	2-2.5" cal.
PS	Prunus sp.	Flowering Cherry	8-10'
Deciduous Shrubs			
AA	*Aronia arbutifolia*	Chokeberry	2.5'
CA	Clethra alnifolia	Summersweet	3'
CS	Cornus sp.	Dogwood	2.5'
DG	Deutzia gracilis	Slender Deutzia	2'
FG	Fothergilla gardenii	Dwarf Fothergilla	2-2.5'
HP	Hydrangea sp.	Hydrangea	2.5'
IV	Itea virginica	Sweetspire	2'
MP	Myrica pensylvanica	Bayberry	3'
RA	Rhus aromatica	Fragrant Sumac	2'
SG	Spirea sp.	Spirea	2'
SP	Syringa sp.	Lilac	3'
VD	Viburnum sp.	Viburnum	3'
WF	Weigela sp	Weigela	2.5'
Evergreen Shrubs			
BS	*Buxus sp.*	Boxwood	2'-3'
CP	Chamaecyparis sp.	False Cypress	3'
IG	Ilex glabra 'Compacta'	Inkberry	3'
IM	Ilex sp	Holly	3'
JV	Juniperus sp.	Juniper	2'
RC	Rhododendron sp.	Rhododendron	3'
TO	Thuja occidentalis	Arborvitae	7-8'
Perennials and Grasses			
GJ	Geranium sp.	Geranium	2 gal
LB	Leucanthemum	Daisy	2 gal
MS	Miscanthus sinensis	Maiden Grass	2 gal
NF	Nepeta faassenii	Nepeta	2 gal
PV	Panicum virgatum	Switch Grass	2 gal
PA	Pennisetum alopecuroides	Fountain Grass	2 gal
PV	Perovskia	Russian Sage	2 gal
RF	Rudbeckia fulgida 'Goldsturm'	Goldsturm Black-Eyed Susan	2 gal
SA	Sedum 'Autumn Joy'	Autumn Joy Sedum	2 gal

RYAN ASSOCIATES
LANDSCAPE ARCHITECTURE AND PLANNING
144 Moody Street, Building 4
Waltham, MA 02453-5332
ph: 781 - 314 - 0401
www.ryan-assoc.com

15 HIGH STREET
NORWELL, MA 02061

OWNER/APPLICANT: NORTHLAND RESIDENTIAL CORPORATION
80 BEHARRELL STREET, SUITE E
CONCORD, MASSACHUSETTS 01742

STREET TREE & LANDSCAPE PLAN

SCALE: AS NOTED

ISSUED		
1	04/30/21	REVIEW & COORDINATION
2		
3		
4		
5		
6		

L-1.0

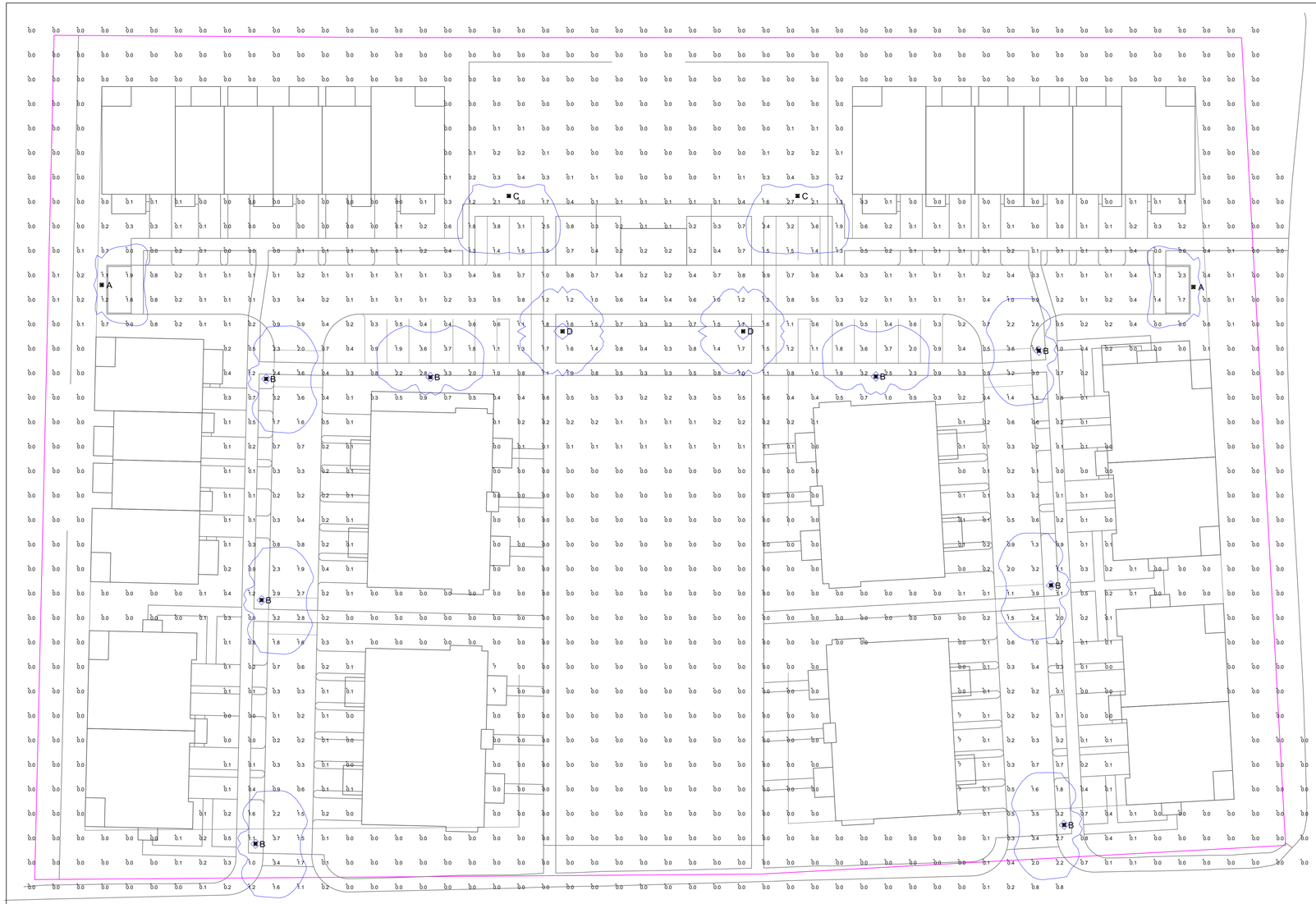

LIGHTING SCHEDULE						
TYPE	QTY	PART NUMBER	MH	LUMENS	LLF	DESCRIPTION
A	2	PCPTT-27LED-4K-4	10'	1930	0.950	27W 4000K LED POST TOP TYPE 4
B	8	PCPTT-55LED-4K-3	10'	3939	0.950	55W 4000K LED POST TOP TYPE 3
C	2	PCPTT-55LED-4K-4	10'	3938	0.950	55W 4000K LED POST TOP TYPE 4
D	2	PCPTT-55LED-4K-5	10'	4047	0.950	55W 4000K LED POST TOP TYPE 5

CALCULATION SUMMARY							
AREA	CALCTYPE	UNITS	AVG	MAX	MIN	AVG/MIN	MAX/MIN
SITE	Illuminance	Fc	0.29	3.9	0.0	N.A.	N.A.
PARKING & DRIVELANES	Illuminance	Fc	0.89	3.9	0.1	8.90	39.00

LED Post Top Traditional

Specifications:

Construction:

Traditional style post top luminaire with decorative cast aluminum cap mechanically attached to optical chamber. Cast aluminum multi-sided cage with UV stabilized acrylic lenses sealed for weather tight operation. Aluminum lower electrical chamber with bottom fitter to mount to 3"OD x 3"H tenon.

Construction:

One piece optical system with internal brass standoffs soldered to the board which can be field replaced. Two-piece die cut silicone and polycarbonate foam gasket ensures weather-proof seal around each individual LED and allows luminaire to be rated for high-pressure hose down applications. The optical cartridge is secured to extruded housing with fasteners and heat pad to ensure thermal conductivity. Optics held into place without use of adhesives and complete assembly is gasketed for high pressure hose down cleaning.

Electrical:

Luminaire equipped with LED driver that operates with 120–277V universal voltage, 50/60Hz and includes 0-10V dimming capability. Power factor is 0.92 at full load. All electrical components rated at 50,000 hours at full load and 25oC ambient conditions. Thermal feedback between PCB and driver to protest luminaire from excessive temperature by reducing drive current as necessary. Surge protection standard with device providing surge current rating of 20KA using 8/20 µSec wave. LSP clamping voltage of 825V and surge rating of 540J.

Finish:

Polyester powder paint finish that is corrosion resistant and resists surface impacts up to 160 inch-pound.

Listing/Certification:

The luminaire bears an NRTL label and is marked suitable for wet locations.

Warranty:

5 year limited warranty covering LED array and LED driver(s).

Images:

Dimensions & Mounting

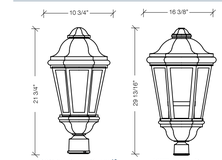

Engine/ Wattage	# of LEDS	Delivered Lumens (varies by option)	Delivered LPW	Drive Current (milliamps)
27	24	1930-1995	71-74	350 mA
55	24	3940-4050	69-71	700 mA
80	36	5900-6020	72-74	700 mA
110	48	7870-8095	71-73	700 mA
135	60	9840-10120	73-76	700 mA

Catalog number:

Series	Engine/Wattage	Color Temp	Distribution	Finish	Options
PCPTT	**27LED** - 24LEDS @ 27W*	**4K** - 4000K, 70 CRI	**3** - Type 3	**BZ** - Bronze	**BLANK**
	55LED - 24LEDS @ 55W**		**4** - Type 4	**BL** - Black	**PC** - Photocell
	80LED - 36LEDS @ 80W**		**5** - Type 5	**GN** - Green	
	110LED - 48LEDS @ 110W**				
	135LED - 60LEDS @ 135W**				

* Small Only
** Large Only

For more information visit our website: www.progresslighting.com

Progress Lighting • 701 Millennium Boulevard • Greenville, SC 29607
REV 07/19

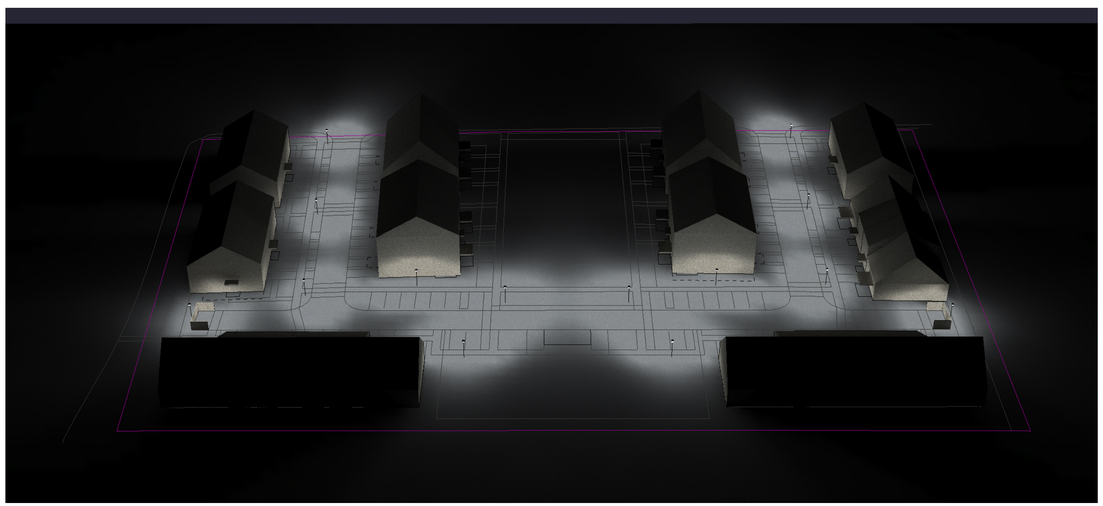

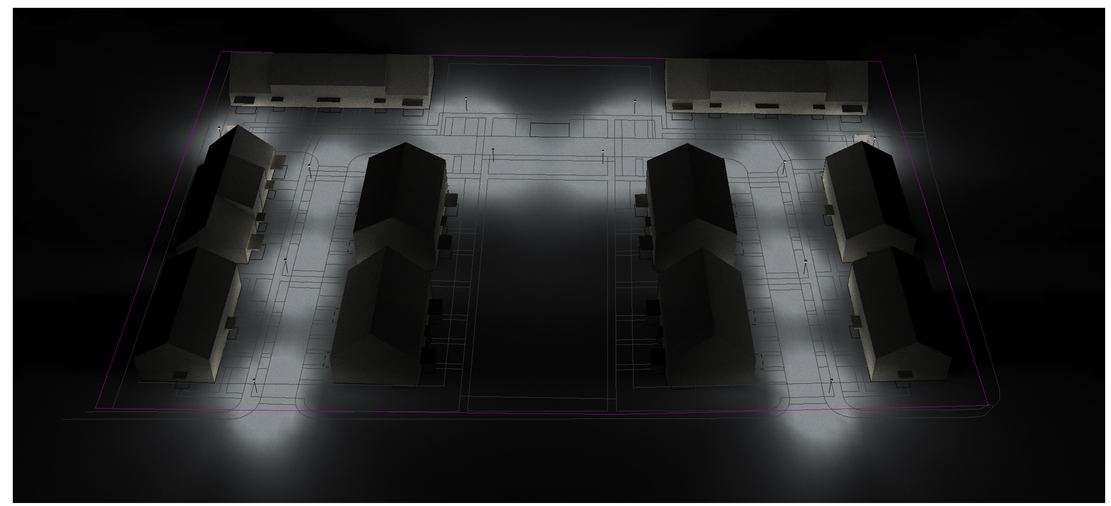

PROGRESS LIGHTING™
COMMERCIAL

701 MILLENNIUM BLVD
GREENVILLE, SC 29607

WWW.PROGRESSLIGHTING.COM
APRUITT@PROGRESSLIGHTING.COM
864.678.1671

15 HIGH ST

NORWELL MA
SITE LIGHTING

SCALE: 1/2" = 1'-0"

DRAWN BY: APRU

DATE: 03.31.21

REVISIONS:

–	–	–
–	–	–
–	–	–
–	–	–
–	–	–
–	–	–
–	–	–
–	–	–
–	–	–
–	–	–
–	–	–

ACCOUNT MANAGER:

JARED SOUZA

GENERAL NOTES:

THIS LIGHTING DESIGN IS BASED ON LIMITED INFORMATION SUPPLIED BY OTHERS TO PROGRESS COMMERCIAL. SITE DETAILS PROVIDED HEREIN ARE REPRODUCED ONLY AS A VISUALIZATION AID AND FIELD DEVIATIONS MAY SIGNIFICANTLY AFFECT PREDICTED PERFORMANCE. PRIOR TO INSTALLATION - CRITICAL SITE INFORMATION (POLE LOCATIONS, ORIENTATION, MOUNTING HEIGHT, ETC) SHOULD BE COORDINATED WITH THE CONTRACTOR AND/OR SPECIFIER RESPONSIBLE FOR THE PROJECT. CONFORMANCE TO FACILITY CODE AND OTHER LOCAL REQUIREMENTS IS THE RESPONSIBILITY OF THE OWNER AND/OR THE OWNER'S REPRESENTATIVE.

PROJECT NUMBER:

032521FHS